DVP-NS611HP/NS710H/NS710HP/NS717HP/NS718H/NS718HP/NS728H/NS728HP
RMT-D187P/RMT-D189P/RMT-D187A

SERVICE MANUAL

Argentina Model
Brazilian Model
E Model
India Model
DVP-NS728HP
PX Model
DVP-NS710H
US Model
DVP-NS611HP/NS710H
Mexican Model
DVP-NS710HP
Korean Model
Taiwan Model
DVP-NS718HP
Middle East Model
Saudi Arabia Model
Singapore Model
DVP-NS718HP/NS728HP
Thailand Model
DVP-NS718HP/NS728H
AEP Model
Australian Model
Russian Model
UK Model
DVP-NS718H/NS728H
Canadian Model
DVP-NS717HP

Photo : DVP-NS728H
RMT-D187P

CD/DVD PLAYER

SONY

SPECIFICATIONS

System

Laser: Semiconductor laser

Outputs

(Jack name:
Jack type/Output level/Load impedance)
LINE OUT (AUDIO):
Phono jack/2 Vrms/10 kilohms
DIGITAL OUT (COAXIAL):
Phono jack/0.5 Vp-p/75 ohms
HDMI OUT: HDMI
19 pin-Standard Connector
COMPONENT VIDEO OUT(Y, P_B, P_R):
Phono jack/Y: 1.0 Vp-p/P_B, P_R: interlace[*1] = 0.648 Vp-p, progressive or interlace[*2] = 0.7 Vp-p/75ohms

[*1] BLACK LEVEL (COMPONENT OUT) is ON

[*2] BLACK LEVEL (COMPONENT OUT) is OFF
(DVP-NS611HP/NS710H/NS710HP/NS717HP/NS718H:CND/NS718HP:TW/NS728HP:E,BR,AR)

COMPONENT VIDEO OUT (Y,P_B,/C_B,C_R)
Phono jack/Y: 1.0 Vp-p/P_B/C_B,P_R/C_R = 0.7Vp-p/75ohms
(DVP-NS718HP:EXCEPT TW/NS718H:EXCEPT CND/NS728HP:EXCEPT E,BR,AR/NS728H)
LINE OUT (VIDEO):
Phono jack/1.0 Vp-p/75 ohms
USB (DVP-NS728H/NS728HP only):
USB jack Type A, maximum current 500 mA (For connecting USB device)

General

Power requirements:
120V AC, 60 Hz
(DVP-NS611HP/NS710H:EXCEPT PX/NS710HP/NS717HP/NS718H:CND)
110-240 V AC,50/60 Hz
(DVP-NS710H:PX/NS718HP:EXCEPT TW/NS718H:AUS/NS728HP/NS728H:AUS)
220-240, 50/60 Hz
(DVP-NS718H:AEP,UK,RUS/NS728H:EXCEPT AEP,UK,RUS)
110V AC, 60 Hz (DVP-NS718HP:TW)
Power consumption:
10W (DVP-NS611HP/NS710H/NS710HP/NS717HP/NS718H:AUS,CND/NS718HP)
11W (DVP-NS718H:EURO ONLY)
12W (DVP-NS728H:AUS/NS728HP)
13W (DVP-NS728H:EURO ONLY)

Dimensions (approx.):
430 × 43 × 206 mm
(17 × 111/16 × 81/10 in.)
(width/height/depth) incl. projecting parts
Mass (approx.):
1.5 kg (33/10 1b) (DVP-NS611HP/NS710H/NS710HP/NS717HP/NS718H:CND,AUS/NS718HP)
1.6 kg (31/2 1b) (DVP-NS718H:EXCEPT CND,AUS/NS728H,NS728HP)
Operating temperature:
5 °C to 35 °C (41 °F to 95 °F)
Operating humidity: 25 % to 80 %

Supplied accessories

- Audio/Video cord (phono plug × 3 ⟷ phono plug × 3) (1)
  EXCEPT UK,AEP
- Remote commander (remote) (1)
- Size AA (R6) batteries (2)
- HDMI cord (1)
  EXCEPT NS710H/718H/728H

A plug adaptor is included with some models.

Specifications and design are subject to change without notice.

SAFETY CHECK-OUT

After correcting the original service problem, perform the following safety checks before releasing the set to the customer:

1. Check the area of your repair for unsoldered or poorly-soldered connections. Check the entire board surface for solder splashes and bridges.
2. Check the interboard wiring to ensure that no wires are "pinched" or contact high-wattage resistors.
3. Look for unauthorized replacement parts, particularly transistors, that were installed during a previous repair. Point them out to the customer and recommend their replacement.
4. Look for parts which, though functioning, show obvious signs of deterioration. Point them out to the customer and recommend their replacement.
5. Check the line cord for cracks and abrasion.
   Recommend the replacement of any such line cord to the customer.
6. Check the B+ voltage to see it is at the values specified.
7. Check the antenna terminals, metal trim, "metallized" knobs, screws, and all other exposed metal parts for AC leakage. Check leakage as described below.

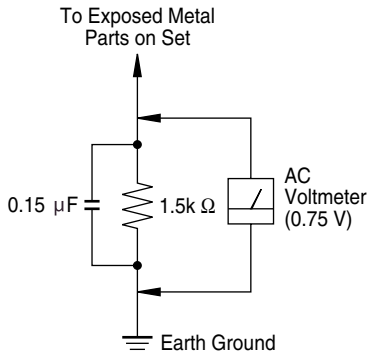

Fig.A. Using an AC voltmeter to check AC leakage.

WARNING!!

WHEN SERVICING, DO NOT APPROACH THE LASER EXIT WITH THE EYE TOO CLOSELY. IN CASE IT IS NECESSARY TO CONFIRM LASER BEAM EMISSION, BE SURE TO OBSERVE FROM A DISTANCE OF MORE THAN 25 cm FROM THE SURFACE OF THE OBJECTIVE LENS ON THE OPTICAL PICK-UP BLOCK.

CAUTION:
The use of optical instrument with this product will increase eye hazard.

CAUTION
Use of controls or adjustments or performance of procedures other than those specified herein may result in hazardous radiation exposure.

SAFETY-RELATED COMPONENT WARNING!!

COMPONENTS IDENTIFIED BY MARK ⚠ OR DOTTED LINE WITH MARK ⚠ ON THE SCHEMATIC DIAGRAMS AND IN THE PARTS LIST ARE CRITICAL TO SAFE OPERATION. REPLACE THESE COMPONENTS WITH SONY PARTS WHOSE PART NUMBERS APPEAR AS SHOWN IN THIS MANUAL OR IN SUPPLEMENTS PUBLISHED BY SONY.

LEAKAGE TEST
The AC leakage from any exposed metal part to earth ground and from all exposed metal parts to any exposed metal part having a return to chassis, must not exceed 0.5mA (500 microamperes). Leakage current can be measured by any one of three methods.

1. A commercial leakage tester, such as the Simpson 229 or RCA WT-540A. Follow the manufacturers' instructions to use these instruments.
2. A battery-operated AC milliammeter. The Data Precision 245 digital multimeter is suitable for this job.
3. Measuring the voltage drop across a resistor by means of a VOM or battery-operated AC volmeter. The "limit" indication is 0.75V, so analog meters must have an accurate low voltage scale. The Simpson 250 and Sanwa SH-63Trd are examples of a passive VOM that is suitable. Nearly all battery operated digital multimeters that have a 2V AC range are suitable. (See Fig. A)

Unleaded solder
Boards requiring use of unleaded solder are printed with the lead-free mark (LF) indicating the solder contains no lead.
(Caution: Some printed circuit boards may not come printed with the lead free mark due to their particular size.)

: LEAD FREE MARK
Unleaded solder has the following characteristics.

- Unleaded solder melts at a temperature about 40°C higher than ordinary solder.
  Ordinary soldering irons can be used but the iron tip has to be applied to the solder joint for a slightly longer time.
  Soldering irons using a temperature regulator should be set to about 350°C
  Caution: The printed pattern (copper foil) may peel away if the heated tip is applied for too long, so be careful!
- Strong viscosity
  Unleaded solder is more viscous (sticky, less prone to flow) than ordinary solder so use caution not to let solder bridges occur such as on IC pins, etc.
- Usable with ordinary solder
  It is best to use only unleaded solder but unleaded solder may also be added to ordinary solder.

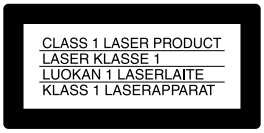

ATTENTION AU COMPOSANT AYANT RAPPORT
À LA SÉCURITÉ!

LES COMPOSANTS IDENTIFÉS PAR UNE MARQUE ⚠ SUR LES DIAGRAMMES SCHÉMATIQUES ET LA LISTE DES PIÈCES SONT CRITIQUES POUR LA SÉCURITÉ DE FONCTIONNEMENT. NE REMPLACER CES COMPOSANTS QUE PAR DES PIÈSES SONY DONT LES NUMÉROS SONT DONNÉS DANS CE MANUEL OU DANS LES SUPPÉMENTS PUBLIÉS PAR SONY.

TABLE OF CONTENTS

SERVICE NOTE

1. USB Harness Dressing 6
2. Disc Removal Procedure (at POWER OFF) 6

3. Child Lock Disabled Procedure 7E
4. Board Replaced Procedure 7E

1. GENERAL

WARNING 1-1
Precautions 1-1
Guide to Parts and Controls 1-1
Hookups 1-2
Step 1: Connecting to Your TV 1-2
About the CONTROL FOR HDMI functions for 'BRAVIA Sync' (for HDMI connections only) 1-2
Step 2: Connecting to Your Audio Component 1-2
Step 3: Connecting the Mains Lead 1-3
Step 4: Preparing the Remote 1-3
Controlling TVs with the remote 1-3
Step 5: Quick Setup 1-3
Connecting a USB Device (DVP-NS728H only) 1-4
Playback 1-4
Playing Discs 1-4
Control Menu display (Magic Pad) 1-4
List of Control Menu items 1-4
Guide to the 'BRAVIA Sync' Display 1-5
'BRAVIA Sync' display 1-5
Various Play Mode Functions 1-5
Creating your own programme (Programme Play) 1-5
Playing in random order (Shuffle Play) 1-6
Playing repeatedly (Repeat Play) 1-6
Repeating a specific portion (A-B Repeat Play) 1-6
Customizing the Playback Configuration 1-6
Adjusting the playback picture (CUSTOM PICTURE MODE) 1-6
Sharpening the picture (SHARPNESS) 1-6
Adjusting the delay between the picture and sound (AV SYNC) 1-6
Locking discs (PARENTAL CONTROL) 1-6
Playing Video, Photo, and Music Files 1-7
Playing video, photo, and music files from USB device (DVP-NS728H only) 1-7
Selecting a photo file 1-7
Viewing a high quality slide show (PhotoTV HD) 1-7
Setting the pace for a slide show (INTERVAL) 1-7
Selecting the slides' appearance (EFFECT) 1-7
Settings and Adjustments 1-8
Using the Setup Display 1-8
LANGUAGE SETUP 1-8
SCREEN SETUP 1-8
CUSTOM SETUP 1-8
AUDIO SETUP 1-9
Setting the digital output signal 1-9
HDMI SETUP 1-9
Additional Information 1-10
Troubleshooting 1-10
Self-diagnosis Function (When letters/numbers appear on the screen) 1-10
Playable Media 1-10
Specifications 1-11E

2. DISASSEMBLY

Non Euro Model
(DVP-NS611HP/NS710H/NS710HP/NS717HP/NS718HP/NS728HP, NS718H:CND,AUS, NS728H:AUS)
Euro Model
(DVP-NS718H:AEP,UK,RUS/NS728H:AEP,UK,RUS)

2-1. Upper Case 2-1
2-2. Front Panel Assembly 2-1
2-3. Loading Assembly 2-2
2-4. Optical Pick-Up (Device, Optical KHM-313CAA/C2RP) 2-3
2-5. Rear Panel, MV Board and IF Board 2-4
* 2-5-1. Rear Panel, MV-60 Board, IF-163 Board
Non Euro Model
(DVP-NS611HP/NS710H/NS710HP/NS717HP/NS718HP/NS728HP, NS718H:CND,AUS, NS728H:AUS) 2-4
* 2-5-2. Rear Panel, MV-62 Board, IF163 Board
Euro Model
(DVP-NS718H:AEP,UK,RUS/NS728H:AEP,UK,RUS) ... 2-5
2-6. Switching Regulator 2-6
2-7. Internal Views 2-7
2-8. Circuit Boards Location 2-8E

3. BLOCK DIAGRAMS

3-1. Overall Block Diagram 3-1
3-2. Power Line Block Diagram 3-3
3-3. System Control/Signal Processor Block Diagram 3-5
3-4. RF/Servo Block Diagram 3-7
3-5. Video (1) Block Diagram 3-9
3-6. Video (2) Block Diagram 3-11
3-7. Audio Block Diagram 3-13
3-8. Interface Control Block Diagram 3-15

4. PRINTED WIRING BOARDS AND SCHEMATIC DIAGRAMS

4-1. Frame Schematic Diagram
MV-60 BOARD (NON-EURO MODEL) 4-1
MV-62 BOARD (EURO MODEL) 4-3
4-2. Printed Wiring Boards and Schematic Diagrams 4-5
- Waveforms MV-60 Board, MV-62 Board 4-6
- IF-163 Printed Wiring Board 4-7
- IF-163 (Interface) Schematic Diagram 4-9
- FB-224 Printed Wiring Board 4-11
- FB-224 (USB) Schematic Diagram 4-11
- MS-203 Printed Wiring Board 4-13
MS-203 (Loading Motor) Schematic Diagram 4-13
- MV-60 Printed Wiring Board 4-15
- MV-62 Printed Wiring Board 4-17
- MV-60 (System, Servo) Schematic Diagram 4-19
- MV-60 (Video) Schematic Diagram 4-21
- MV-60 (Audio) Schematic Diagram 4-23
- MV-62 (System, Servo) Schematic Diagram 4-25
- MV-62 (Video) Schematic Diagram 4-27
- MV-62 (Audio) Schematic Diagram 4-29
- Switching Regulator Board (SRV2187UC) Printed Wiring Board 4-31
- Switching Regulator Board (SRV2187UC) Schematic Diagram 4-33
- Switching Regulator Board (SRV2186WW) Printed Wiring Board 4-35
- Switching Regulator Board (SRV2186WW) Schematic Diagram 4-37

5. IC PIN FUNCTION DESCRIPTION

5-1. System Control Pin Function
(MV-60/62 Boards IC101) 5-1

6. TEST MODE

6-1. Executing IOP Measurement 6-1
6-2. Emergency History Check 6-1
6-3. Initializing Setup Data 6-2
6-4. Version Information 6-3
6-5. If Con Self Diagnostic Function 6-3

7. ELECTRICAL ADJUSTMENT

7-1. Switching Regulator Output Voltage Check 7-1
7-2. Adjustment of Video System 7-2

8. REPAIR PARTS LIST

8-1. Exploded Views 8-1
8-3. Mechanism Deck Assembly 8-3
8-2. Electrical Parts List 8-4

SERVICE NOTE

1. USB HARNESS DRESSING

a) MV-60

1) Please ensure USB-005 dressing as shown in Fig. 1.
2) Please ensure IB-001 dressing as shown in Fig. 1a.

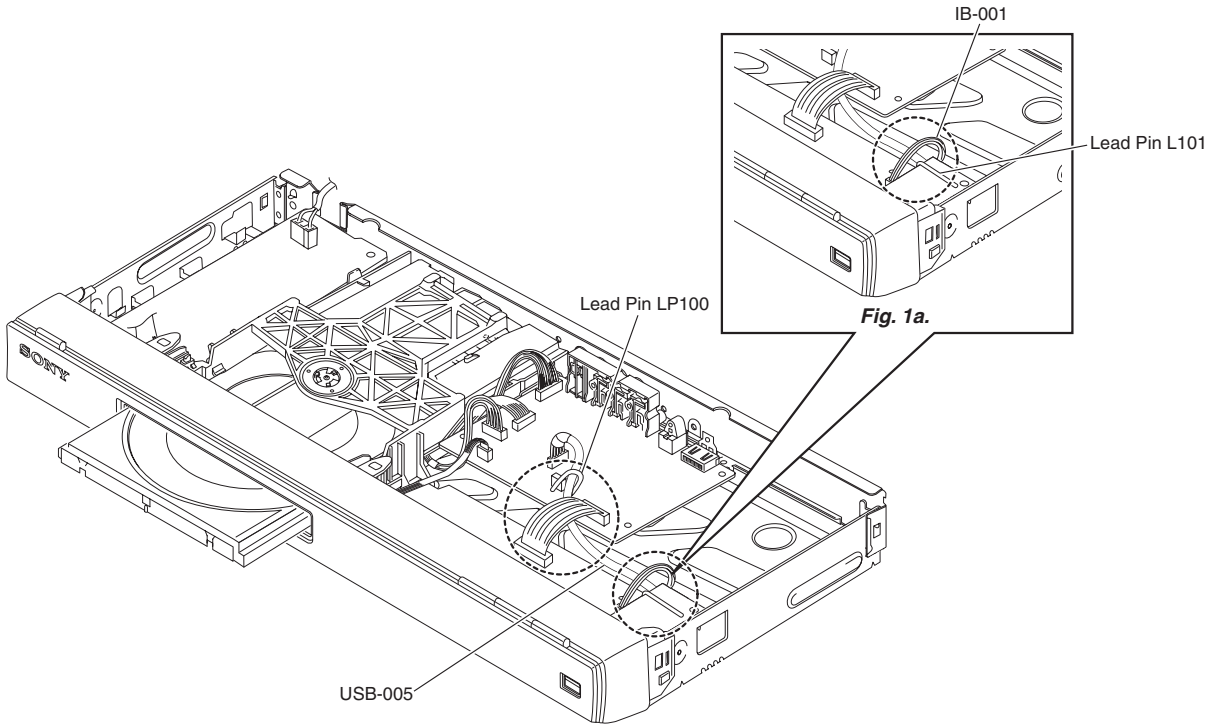

Fig. 1a.

Fig. 1

b) MV-62

1) Please ensure USB-006 dressing as shown in Fig. 2.
2) Please ensure IB-001 dressing as shown in Fig. 2a.

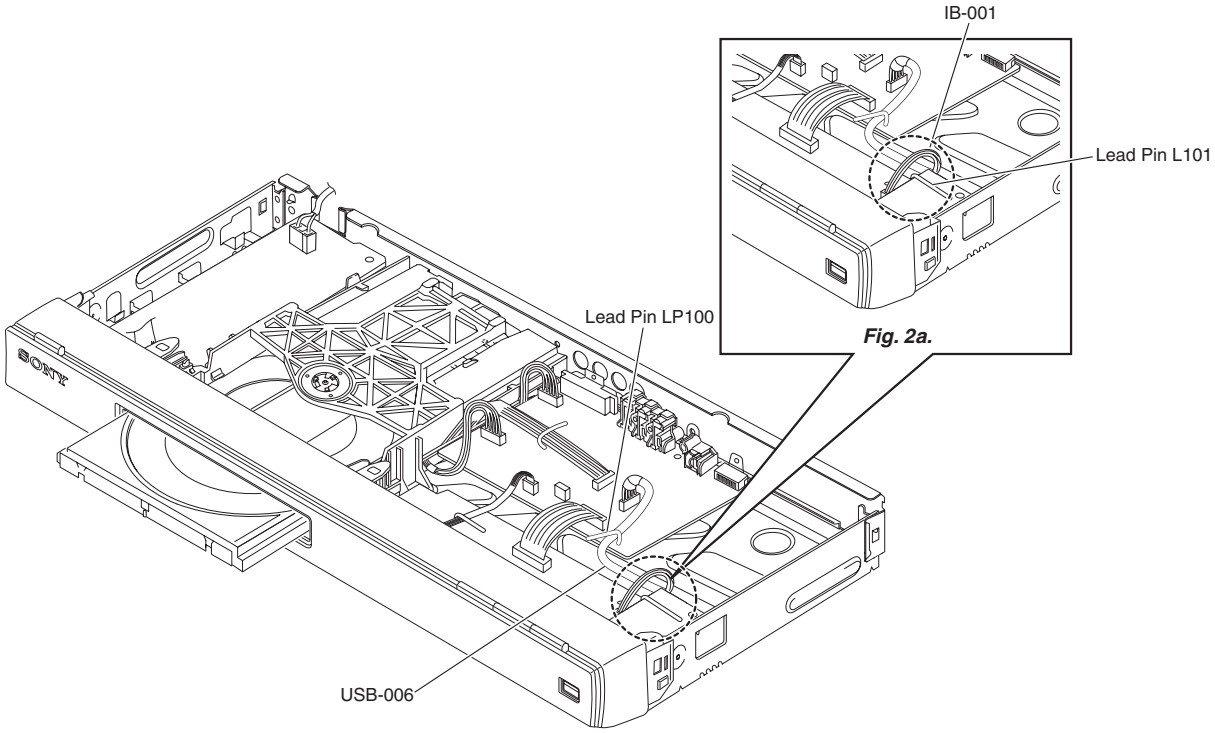

Fig. 2a.

Fig. 2

2. DISC REMOVAL PROCEDURE (at POWER OFF)

1) Remove dust cover sticker to access a hole at the bottom.
2) Insert a tapering driver or a tweezer into the aperture and move the lever of chuck cam in the direction of the arrow A. (See Fig. 1)
3) Draw out the tray in the direction of the arrow B, and remove a disc. (See Fig. 1)
4) After removing the disc, push in the direction of arrow C until the tray fully in.
5) Move the lever of chuck cam in the direction of arrow D.

Note:
MUST replace a new dust cover sticker once its removed.

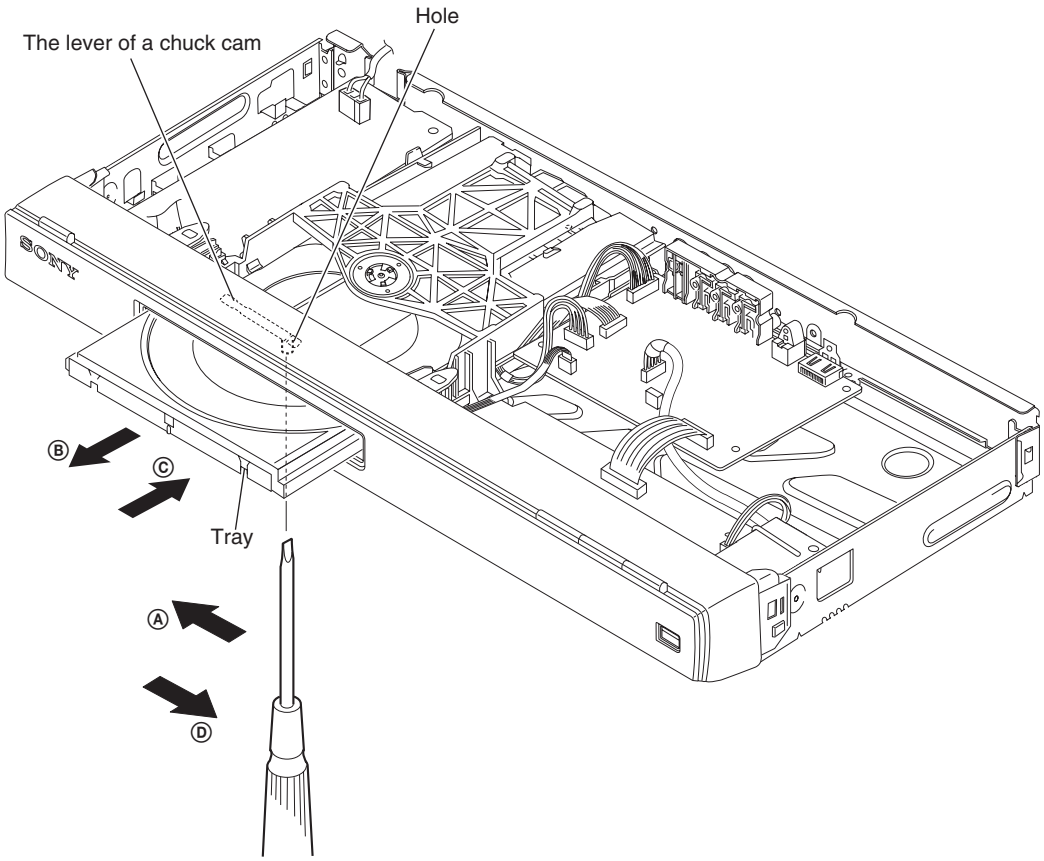

Fig. 1

3. CHILD LOCK DISABLED PROCEDURE

When "LOCKED" appears on the front panel display, Child Lock is activated. In order to disable it, either

1) Press ↶ RETURN, ENTER and then I/⏻ on the remote when the player is in standby mode.
   The player turns on and "UNLOCKED" appears on the front panel display; or
2) Disconnect the player from the wall outlet (AC power source).

Note:
i. Child Lock is set when you press ↶ RETURN, ENTER, and then I/⏻ on the remote during player in standby mode.
ii. The ⏏ buttons on the player or the remote do not work while the Child Lock is set.

4. BOARD REPLACED PROCEDURE

1) For main board, once EEPROM IC is damaged or not functioning, the mounted PWB must be replaced.
2) After replaced the board inside the player, please see page 6-1 to check the Model Name is correct.
3) For Interface board, please see page 6-4 to check the model.

SECTION 1
GENERAL

This section is extracted from instruction manual. 4-130-259-11

WARNING

To reduce the risk of fire or electric shock, do not expose this apparatus to rain or moisture.
To avoid electrical shock, do not open the cabinet. Refer servicing to qualified personnel only.
The mains lead must only be changed at a qualified service shop.
Batteries or batteries installed apparatus shall not be exposed to excessive heat such as sunshine, fire or the like.

CAUTION

The use of optical instruments with this product will increase eye hazard. As the laser beam used in this CD/DVD player is harmful to eyes, do not attempt to disassemble the cabinet.
Refer servicing to qualified personnel only.

Disposal of Old Electrical & Electronic Equipment
This symbol is applicable only in the European Union and other European countries with separate collection systems.

Precautions

Safety
- The power requirements and power consumption of this unit are indicated on the back of the unit. Check that the unit's operating voltage is identical with your local power supply.

Power requirements and power consumption

- To prevent fire or shock hazard, do not place objects filled with liquids, such as vases, on the apparatus.

Installing
- Do not install the unit in an inclined position. It is designed to be operated in a horizontal position only.
- Keep the unit and discs away from equipment with strong magnets, such as microwave ovens, or large loudspeakers.
- Do not place heavy objects on the unit.

Lightning
For added protection for this set during a lightning storm, or when it is left unattended and unused for long periods of time, unplug it from the wall outlet. This will prevent damage to the set due to lightning and power-line surges.

For Customers in Taiwan only

Please recycle used batteries.

Notes about the discs

- To keep the disc clean, handle the disc by its edge. Do not touch the surface. Dust, fingerprints, or scratches on the disc may cause it to malfunction.

- Do not expose the disc to direct sunlight or heat sources such as hot air ducts, or leave it in a car parked in direct sunlight as the temperature may rise considerably inside the car.
- After playing, store the disc in its case.
- Clean the disc with a cleaning cloth.
  Wipe the disc from the centre out.

- Do not use solvents such as benzine, thinner, commercially available cleaners, or anti-static spray intended for vinyl LPs.
- If you have printed the disc's label, dry the label before playing.
- Do not use the following discs:
  – A disc that has a non-standard shape (e.g., card, heart).
  – A disc with a label or sticker on it.
  – A disc that has cellophane tape or sticker adhesive on it.

Precautions

On safety
Should any solid object or liquid fall into the cabinet, unplug the player and have it checked by qualified personnel before operating it any further.

On power sources
- The player is not disconnected from the AC power source (mains) as long as it is connected to the wall outlet, even if the player itself has been turned off.
- If you are not going to use the player for a long time, be sure to disconnect the player from the wall outlet. To disconnect the AC power cord (mains lead), grasp the plug itself; never pull the cord.

On placement
- Place the player in a location with adequate ventilation to prevent heat build-up in the player.
- Do not place the player on a soft surface such as a rug.
- Do not place the player in a location near heat sources, or in a place subject to direct sunlight, excessive dust, or mechanical shock.
- Do not install this player in a confined space, such as a bookshelf or similar unit.
- Install the player so that the AC power cord (mains lead) can be unplugged from the wall socket immediately in the event of trouble.
- If the player is brought directly from a cold to a warm location, or is placed in a very damp room, moisture may condense on the lenses inside the player. Should this occur, the player may not operate properly. In this case, remove the disc and leave the player turned on for about half an hour until the moisture evaporates.
- When you move the player, take out any discs. If you don't, the disc may be damaged.

On adjusting volume
Do not turn up the volume while listening to a section with very low level inputs or no audio signals. If you do, the speakers may be damaged when a peak level section is played.

On cleaning
Clean the cabinet, panel, and controls with a soft cloth slightly moistened with a mild detergent solution. Do not use any type of abrasive pad, scouring powder or solvent such as alcohol or benzine.

On cleaning discs, disc/lens cleaners
Do not use cleaning discs or disc/lens cleaners (including wet or spray types). These may cause the apparatus to malfunction.

On replacement of parts
In the event that this unit is repaired, repaired parts may be collected for reuse or recycling purposes.

Copyrights
- This product incorporates copyright protection technology that is protected by U.S. patents and other intellectual property rights. Use of this copyright protection technology must be authorized by Macrovision, and is intended for home and other limited viewing uses only unless otherwise authorized by Macrovision. Reverse engineering or disassembly is prohibited.
- "DVD+RW," "DVD-RW," "DVD+R," "DVD+R DL," "DVD-R," "DVD VIDEO," and "CD" logos are trademarks.
- This DVD player incorporates High-Definition Multimedia Interface (HDMI™) technology. HDMI, the HDMI Logo and High-Definition Multimedia Interface are trademarks or registered trademarks of HDMI Licensing LLC.

About this manual
- The instructions in this manual are for 5 models: DVP-NS718H, DVP-NS728H, DVP-NS710HP, DVP-NS718HP, and DVP-NS728HP. Check your model name by looking at the rear panel of the player. DVP-NS728HP is the model used for instruction purposes. Any difference in operation is clearly indicated in the text, for example, "DVP-NS728HP only."
- Icons, such as DVD Video, listed at the top of each explanation indicate what kind of media can be used with the function being explained.
  For details see "Playable Media" (page 43).
- Instructions in this manual describe the controls on the remote. You can also use the controls on the player if they have the same or similar names as those on the remote.
- "DVD" may be used as a general term for commercial DVDs, DVD+RWs/DVD+Rs/DVD+R DLs (+VR mode) and DVD-RWs/DVD-Rs/DVD-R DLs (VR mode, video mode).
- NEED-to-know information (to prevent incorrect operation) is listed under the ❗ icon. NICE-to-know information (tips and other useful information) is listed under the ☼ icon.

IMPORTANT NOTICE
Caution: This player is capable of holding a still video image or on-screen display image on your television screen indefinitely. If you leave the still video image or on-screen display image displayed on your TV for an extended period of time you risk permanent damage to your television screen. Plasma display panel televisions and projection televisions are susceptible to this.

If you have any questions or problems concerning your player, please consult your nearest Sony dealer.

Guide to Parts and Controls

For more information, see the pages indicated in parentheses.

Remote

Check your model number of the supplied remote. The model number is indicated at the bottom of the remote.

RMT-D187P/RMT-D189P

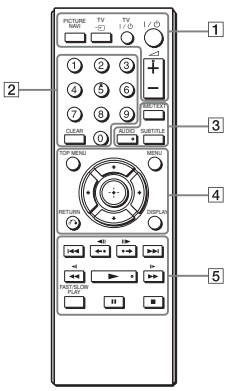

RMT-D187A/RMT-D189A

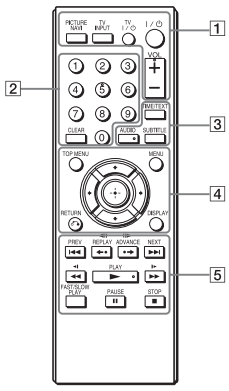

⊿/VOL (volume) +, number 5, AUDIO, and ► buttons have a tactile dot. Use the tactile dot as a reference when operating the player.

1 **PICTURE NAVI (29)**
Divides the screen into 9 subscreens so you can choose the desired scene quickly.
Each time you press the button, the display changes as follows:
• CHAPTER VIEWER
• TITLE VIEWER
• TRACK VIEWER
The photo files in the album appear in 16 subscreens.

TV ⊐/TV INPUT (input select) (14)
Switches between TV and other input sources.

TV I/⏻ (on/standby) (14)
Turns on the TV, or sets to standby mode.

I/⏻ (on/standby) (15)
Turns on the player, or sets to standby mode.

⊿/VOL (volume) +/– (14)
Adjusts the TV volume.

2 **Number buttons**
Enters the title/chapter numbers, etc.

CLEAR (20)
Clears the entry field.

3 **TIME/TEXT (9)**
Displays the playing time and remaining time on the TV screen or front panel display. Press repeatedly to change the displayed information. CD/DVD text appears only when text is recorded on the disc.
If music file has an ID3 tag, the player will display the album name/track title from the ID3 tag information. This player supports ID3 versions 1.0/1.1 and 2.2/2.3.

AUDIO (💬)
Changes the audio language or audio channel.
When 4 digits are displayed, they indicate a language code. See "Language Code List" on page 47 to see which language the code represents.

SUBTITLE (💬) (29)
– Changes the subtitles when subtitles are recorded on DVD VIDEOs/DVD-VR mode/DivX video files only.
– Displays lyrics for a music file when pressed during playback. For details see page 29.

4 **TOP MENU**
Displays the DVD's top menu.

MENU (28)
Displays the menu.

↩ RETURN (18)
Returns to the previous display.

DISPLAY (19)
Displays the playback information on the screen.

←/↑/↓/→ (20)
Moves the highlight to select a displayed item.

Centre button (ENTER) (15)
Enters the selected item.

5 **⏮/⏭ PREV/NEXT (previous/next)**
Skips to the previous/next chapter, track, or scene in continuous play mode.

⏮ ◀II/II▶ ⏭ REPLAY/STEP/STEP/ADVANCE (replay/step/step/advance)
– Replays the scene[*1*3]/briefly fast forward the scene[*2*3] when pressed during playback.
– Plays backward[*4]/forward[*5] one frame at a time when pressed during pause mode.
– Changes the LUN (Logical Unit Number) devices when pressed during the list of albums or tracks is displayed (page 29).

◀◀/▶▶ (scan/slow)
– Fast reverses/fast forwards when pressed during playback. The speed changes when pressed repeatedly.
– Plays backward[*4]/forward[*5] in slow motion when pressed repeatedly during pause mode.

► PLAY (play)
Starts or re-starts playback.

II PAUSE (pause)
Pauses or re-start playback.

■ STOP (stop)
Stops playback.

FAST/SLOW PLAY
Plays in various speed with sound[*6] when pressed repeatedly during playback.

*1 For DivX video files and DVDs except DVD+RWs/DVD+Rs/DVD+R DLs.
*2 For DVDs and DivX video files only.
*3 These functions may not work with some scenes.
*4 For DVD VIDEOs and DVD-VR mode only.
*5 For DVDs, VIDEO CDs, and video files only.
*6 For DVDs and VIDEO CDs only.

❗ Some playback functions may not work with unsupported MPEG-4 format (page 43).

➡continued

Front panel

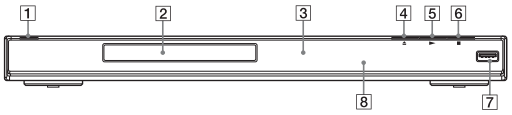

1 I/⏻ (on/standby) button (15)

2 Disc tray (17)

3 Front panel display (9)

4 ⏏ (open/close) button (17)
Opens or closes the disc tray.

5 ► (play) button (17)
The ► button has a tactile dot*.

6 ■ (stop) button (17)
Stops playback.

7 USB jack (type A) (16, 29) (DVP-NS728H and DVP-NS728HP only)
Connect a USB device to this jack.

8 (remote sensor) (13)

* Use the tactile dot as a reference when operating the player.

To lock the disc tray (Child Lock)
You can lock the disc tray to prevent it being opened by mistake.

When the player is in standby mode, press RETURN, ENTER, and then I/⏻ on the remote.

The player turns on and "LOCKED" appears on the front panel display. The ⏏ button on the player does not work while the Child Lock is set.

To unlock the disc tray
When the player is in standby mode, press RETURN, ENTER, and then I/⏻ again.

Even if you select "RESET" under "SETUP" in the Control Menu (page 32), the disc tray remains locked.

To change the colour system
If the on-screen menu of the player does not appear on the connected TV, switch the player's colour system to match the colour system of the TV (NTSC or PAL).
First turn off the player by pressing I/⏻, and then press I/⏻ again while holding down ■ on the player.
The player turns back on, and the name of the colour system will appears on the front panel display.

Rear panel

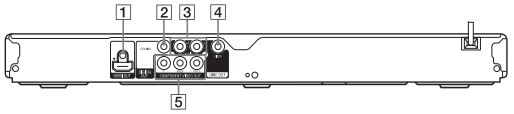

1 HDMI OUT (High-Definition Multimedia Interface out) jack (10, 12)

2 DIGITAL OUT (COAXIAL) jack (12)

3 LINE OUT L/R (AUDIO) jacks (12)

4 LINE OUT (VIDEO) jack (10)

5 COMPONENT VIDEO OUT jacks (10)

Front panel display

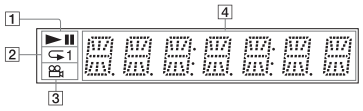

1 ►, ❚❚
Lights up during playback or pause.

2 ↻1
Lights up during Repeat Play.

3
Lights up when you can change the angle.

4 **Playback information**
You can view the time and text information by pressing the TIME/TEXT button on the remote repeatedly. The display changes as follows:

When playing a DVD
Current title playing time
↓
Current title remaining time
↓
Current chapter playing time
↓
Current chapter remaining time
↓
Text
↓
Current title and chapter number
(Returns to top automatically)

When playing music or video files
Current file*1 or track*2 playing time and number
↓
Current file*1 or track name/MP3 ID3 track title*2
↓
Current album and file*1 or track*2 number
(Returns to top automatically)

*1 for video file
*2 for music file

When playing a VIDEO CD (without PBC functions) or CD
Current track playing time and number
↓
Current track remaining time
↓
Disc playing time
↓
Disc remaining time
↓
Text

When unpacking, check the supplied accessories by referring to page 46.

- Plug cables securely to prevent unwanted noise.
- Refer to the operating instructions supplied with the components to be connected.
- Be sure to disconnect the mains lead of each component before connecting.

Step 1: Connecting to Your TV

Connect this player to your TV using a video cable. Select one of the patterns A through C, according to the input jack on your TV.
In order to view progressive signal (525p or 625p) pictures with a compatible TV, you must use pattern B. Select pattern C when connecting to a TV equipped with HDMI input.

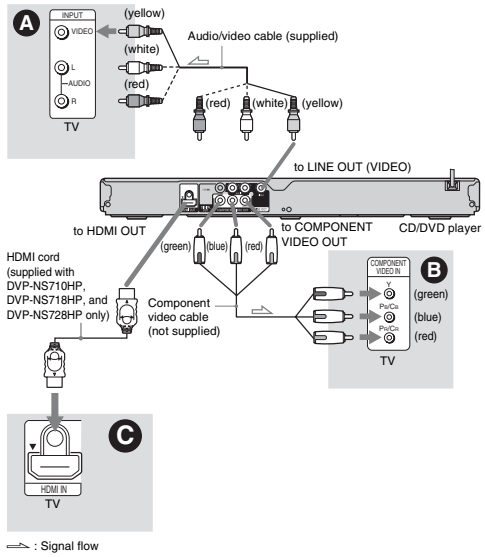

: Signal flow

A Video input jack
You will enjoy standard quality images.

B Component video input jacks (Y, P_B/C_B, P_R/C_R)
You will enjoy accurate colour reproduction and high quality images.

C HDMI/DVI input jack

Use a certified Sony HDMI cord to enjoy high quality digital picture and sound through the HDMI OUT jack.

When connecting to a Sony TV that is compatible with the CONTROL FOR HDMI function, see page 11.

When connecting to the HDMI OUT jack
Follow the steps below. Improper handling may damage the HDMI OUT jack and the connector.

1 Carefully align the HDMI OUT jack on the back of the player and the HDMI connector by checking their shapes.
Make sure the connector is not upside down or tilted.

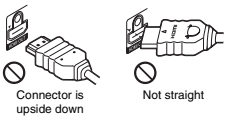

2 Insert the HDMI connector straight into the HDMI OUT jack.
Do not bend or apply force to the HDMI connector.

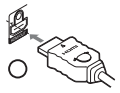

To connect to a TV with DVI input
Use an HDMI-DVI converter cord (not supplied). The DVI jack will not accept any audio signals, so you have to use another audio connection in addition to this connection (page 12). Furthermore, you cannot connect the HDMI OUT jack to DVI jacks that are not HDCP compliant (e.g., DVI jacks on PC displays).

When connecting to a standard 4:3 screen TV
Some images may not fit your TV screen. To change the picture size, see page 33.

- Do not connect a VCR, etc., between your TV and the player. If you pass the player signals via the VCR, you may not receive a clear image on the TV screen. If your TV has only one audio/video input jack, connect the player to this jack.
- If the picture appears too white when you are using A connection, set "BLACK LEVEL" in "SCREEN SETUP" to "OFF" (page 34).
- Be sure to disconnect the HDMI cord when moving the player.
- Do not apply too much pressure to the cabinet wall, if you place the player on the cabinet with the HDMI cord connected. It may damage the HDMI OUT jack or the HDMI cord.
- When connecting or disconnecting, do not screw in or rotate the HDMI connector.

About the CONTROL FOR HDMI functions for 'BRAVIA Sync' (for HDMI connections only)

By connecting to Sony components that are compatible with the CONTROL FOR HDMI function with an HDMI cord (supplied with DVP-NS710HP, DVP-NS718HP, and DVP-NS728HP only), you can enjoy the following features:
- One-Touch Play (page 17)
- System-Power Off
  When you turn the TV off by using the I/⏻ button on the TV's remote, the components compatible with CONTROL FOR HDMI function turn off automatically.

Depending on the connected component, the CONTROL FOR HDMI function may not work. Refer to the operating instructions supplied with the component.

Step 2: Connecting to Your Audio Component

Select one of the following patterns Ⓐ or Ⓑ, according to the input jack on your TV monitor, projector, or audio component such as an AV amplifier (receiver).
This will enable you to listen to sound.

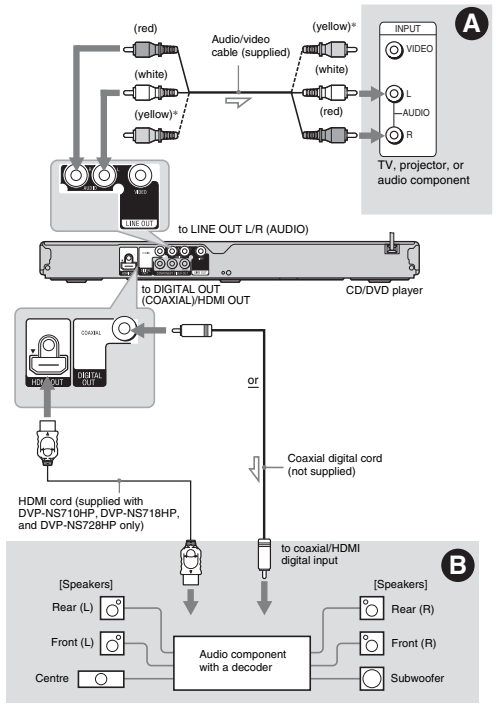

* The yellow plug is used for video signals (page 10).

For correct speaker location, see the operating instructions supplied with the connected components.

Ⓐ Audio L/R input jacks

This connection will use your TV's or audio component's two speakers for sound.

Ⓑ Digital audio input jack

If your audio component has a Dolby*1 Digital, DTS*2, or MPEG audio decoder and a digital input jack, use this connection. You can enjoy Dolby Digital (5.1ch), DTS (5.1ch), and MPEG audio (5.1ch) surround effect.
If you connect to a Sony audio component that is compatible with the CONTROL FOR HDMI function, refer to the operating instructions supplied with the audio component.

*1 Manufactured under license from Dolby Laboratories.
Dolby, Pro Logic, and the double-D symbol are trademarks of Dolby Laboratories.
*2 Manufactured under license under U.S. Patent #: 5,451,942 & other U.S. and worldwide patents issued & pending. DTS and DTS Digital Out are registered trademarks and the DTS logos and Symbol are trademarks of DTS, Inc. © 1996-2008 DTS, Inc. All Rights Reserved.

- After you have completed the connection, make the appropriate settings in Quick Setup (page 15). If your audio component has an MPEG audio decoder function, set "MPEG" to "MPEG" in "AUDIO SETUP" (page 37). Otherwise, no sound or a loud noise will come from your speakers.
- The TVS effects of this player cannot be used with this connection.
- When you connect the player to an audio component using an HDMI cord, you will need to do one of the following:
  – Connect the audio component to the TV with the HDMI cord.
  – Connect the player to the TV with a video cord other than HDMI cord (component video cord or audio/video cord).
- When connecting to the HDMI OUT jack, carefully align the HDMI connector with the jack. Do not bend and apply force to the HDMI cord.

Step 3: Connecting the Mains Lead

Plug the player and TV mains lead (power cord) into a mains.

Step 4: Preparing the Remote

Insert two R6 (size AA) batteries by matching the ⊕ and ⊖ ends on the batteries to the markings inside the compartment. When using the remote, point it at the remote sensor on the player.

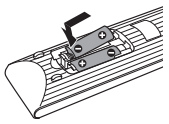

- Do not leave the remote in an extremely hot or humid place.
- Do not drop any foreign object into the remote casing, particularly when replacing the batteries.
- Do not expose the remote sensor to direct light from the sun or a lighting apparatus. Doing so may cause a malfunction.
- If you do not use the remote for an extended period of time, remove the batteries to avoid possible damage from battery leakage and corrosion.

➡continued

Controlling TVs with the remote

You can control the sound level, input source, and power switch of your Sony TV with the supplied remote.

Available buttons

Depending on the connected unit, you may not be able to control your TV using all or some of the buttons on the supplied remote.

Buttons	Operations
TV I/⏻	Turn the TV on or off
+/VOL (volume) +/–	Adjust the volume of the TV
TV ⏎/TV INPUT (input select)	Switch the TV's input source between the TV and other input sources

To control other TVs with the remote

You can control the volume, input source, and power switch of non-Sony TVs as well.
If your TV is listed in the table below, set the appropriate manufacturer's code.

When you replace the batteries of the remote, the code number may be reset to the default setting. Set the appropriate code number again.

1 While holding down TV I/⏻, press the number buttons to select your TV's manufacturer's code.
2 Release TV I/⏻.

Code numbers of controllable TVs

If more than one code number is listed, try entering them one at a time until you find the one that works with your TV.

◆ **For RMT-D187P/RMT-D189P remote commander only**

Manufacturer	Code number
Sony	01 (default)
Hitachi	24
JVC	33
LG/Goldstar	76
Panasonic	17, 49
Philips	06, 08, 72
Samsung	71
Sharp	29
Toshiba	38

◆ **For RMT-D187A/RMT-D189A remote commander only**

Manufacturer	Code number
Sony	01 (default)
Hitachi	02
LG/Goldstar/NEC	04
MGA/Mitsubishi	13
Panasonic	19
Philips	21
Pioneer	16
RCA	10
Samsung	20
Sharp	18
Toshiba	07

Step 5: Quick Setup

Follow the steps below to make the minimum number of basic adjustments for using the player.
To skip an adjustment, press ▶▶I. To return to the previous adjustment, press I◀◀. The on-screen displays differ depending on the player model. Oceanian model is used for illustration unless otherwise specified.

1 Turn on the TV then press I/⏻.

2 Switch the input selector on your TV so that the signal from the player appears on your TV screen.

"Press [ENTER] to run QUICK SETUP" (press enter to run Quick Setup) appears at the bottom of the screen. If this message does not appear, select "QUICK" (quick) under "SETUP" (setup) in the Control Menu to run Quick Setup (page 20).

3 Press ENTER without inserting a disc.

The Language Setup Display appears. The available languages differ depending upon the player model.

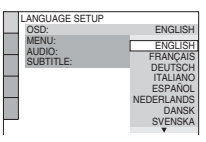

4 Press ↑/↓ to select a language.

The player displays the menu and subtitles in the selected language.

5 Press ENTER.

The Screen Setup Display appears.

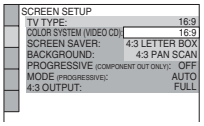

6 Press ↑/↓ to select the setting that matches your TV type.

◆ **If you have a wide-screen TV or a 4:3 standard TV with a wide-screen mode**
• 16:9 (page 33)

◆ **If you have a 4:3 standard TV**
• 4:3 LETTER BOX or 4:3 PAN SCAN (page 33)

7 Press ENTER.

The Setup Display for selecting the type of jack used to connect your audio component appears.

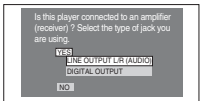

8 Press ↑/↓ to select the type of jack (if any) you are using to connect to an audio component, then press ENTER.

Select "NO," if you do not connect an audio component, then go to step 12.
Select "YES: LINE OUTPUT L/R (AUDIO)," if you connect an audio component using an audio cable, then go to step 12.
Select "YES: DIGITAL OUTPUT," if you connect an audio component using a digital coaxial cable/HDMI cord.

➡continued

9 Press ↑/↓ to select the type of Dolby Digital signal to your audio component.

If your audio component has a Dolby Digital decoder, select "DOLBY DIGITAL." Otherwise, select "D-PCM."

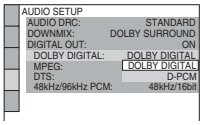

10 Press ENTER.

"DTS" is selected.

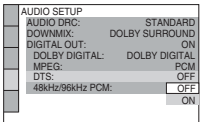

11 Press ↑/↓ to select whether or not to send a DTS signal to your audio component.

If your audio component has a DTS decoder, select "ON." Otherwise, select "OFF."

12 Press ENTER.

Quick Setup is finished and connections are complete.
If your audio component has an MPEG audio decoder, set "MPEG" to "MPEG" (page 37).

When "PhotoTV HD" mode is activated (page 30), the selection for "TV TYPE" is skipped.

Connecting a USB Device (DVP-NS728H and DVP-NS728HP only)

You can connect a USB device to the USB jack of the player to play video, photo, or music files. For a list of USB devices that can be connected to the player, refer "Playable USB Devices" (supplement). For details on playable files, see "Playable Media" page 43.

Refer to the operating instructions supplied with the USB device before connecting it to the player.

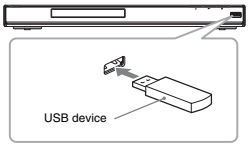

To play data files, see "Playing video, photo, and music files from USB device (DVP-NS728H and DVP-NS728HP only)" (page 29).

To remove the USB device

Stop playback and disconnect the USB device from the USB jack.

- Take the precaution of backing up important files on the USB device before connecting it to the player.
- Do not forcibly connect the USB device and make sure the plug is oriented correctly.
- Do not connect the player and the USB device through a USB hub.
- Make sure no virus-infected files are contained on a USB device before use.
- This player supports USB Mass Storage Class only.
- This player supports USB device with FAT12, FAT16, or FAT32 format only.
- Some USB devices may not work with this player.

Playback

Playing Discs DVD Video DVD VR VCD CD DATA

1 Switch the input selector on your TV so that the signal from the player appears on your TV screen.

2 Press ⏏ on the player, and place a disc on the disc tray.

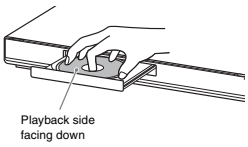

3 Press ►.

The disc tray closes. The player starts playback (continuous play). Adjust the volume on the TV or the audio component.
Depending on the disc, a menu may appear on the TV screen. For DVD VIDEOs, see page 7. For VIDEO CDs, see page 18.

If a disc is inside the player

Press ►.

To stop playback

Press ■.

To pause playback

Press ❚❚.

One-Touch Play (for HDMI connections only)

With one touch of the ► button on the remote, the player and your TV automatically turn on and the TV's input is switched to the player. Playback starts automatically.

The TV's input will also switch to the player automatically, in the following cases:
– You press ►, TOP MENU, MENU, or DISPLAY buttons on the remote.
Note that these buttons are not effective when you play audio CD or music files in "MUSIC" mode.
– If a disc with auto play function is loaded.
– If you push the disc tray to close.

You can have the player turned off automatically whenever you leave it in stop mode for more than 30 minutes. To turn this function on or off, set "AUTO POWER OFF" in "CUSTOM SETUP" to "ON" or "OFF" (page 35).

- Depending on the DVD or VIDEO CD, some operations may be different or restricted. Refer to the operating instructions supplied with your disc.
- Discs created on DVD recorders must be correctly finalized before they can be played. For more information about finalizing, refer to the operating instructions supplied with the DVD recorder.

Note on playing DTS sound tracks on a DVD VIDEO

DTS audio signals are output only through the DIGITAL OUT (COAXIAL)/HDMI OUT jack.

To resume playback from the point where you stopped the disc (Multi-disc Resume) DVD Video VCD

When you press ► again after you stop playback, the player starts playback from the point when you pressed ■.

- To play from the beginning of the disc, press ■ twice, then press ►.
- With DVD VIDEOs and VIDEO CDs, the player stores the point where you stopped the disc for up to 6 discs and resumes playback the next time you insert the same disc. If you store a resume playback point for the seventh disc, the resume playback point for the first disc is deleted.

→continued

- "MULTI-DISC RESUME" in "CUSTOM SETUP" must be set to "ON" (default) for this function to work (page 35).
- Resume Play does not work during Shuffle Play and Programme Play.
- With some discs, Resume Play may not work, depending on the point you stop playback, or if you press I/⏻.

To play VIDEO CDs with PBC functions (PBC Playback) VCD

PBC (Playback Control) allows you to play VIDEO CDs interactively using the menu on your TV screen.
When you start playing a VIDEO CD with PBC functions, the menu for your selection appears.
Select an item using the number buttons, and press ENTER. Then, follow the instructions in the menu (press ► when "Press SELECT" appears).

To return to the menu

Press ↶ RETURN.

To play without using PBC, press I◄◄/►►I or the number buttons while the player is stopped to select a track, then press ► or ENTER.
"Play without PBC" appears on the TV screen and the player starts continuous play. You cannot play still pictures such as a menu.
To return to PBC playback, press ■ twice then press ►.

Control Menu display

Use the Control Menu to select a function and to view related information. Press DISPLAY repeatedly to turn on or change the Control Menu display as follows:

Control Menu display 1
↓
Control Menu display 2 (Except CD and when "MEDIA" is set to "MUSIC")
↓
Control Menu display off

The Control Menu display 1 and 2 will show different items depending on the media type.

Example: Control Menu display 1 when playing a DVD VIDEO.
Press ↑/↓ to select the Control Menu item, then press ENTER.
For details about the item, see "List of Control Menu items" (page 20, 21).

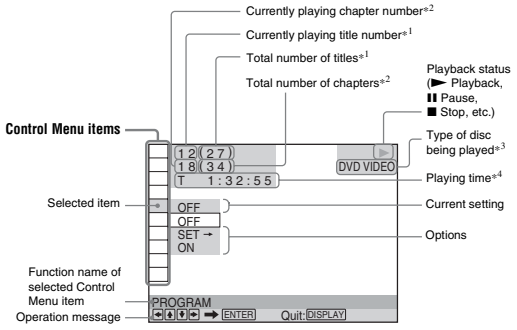

*1 Displays the album number for video, photo, and music files, scene number for VIDEO CDs (PBC is on), and track number for VIDEO CDs/CDs.
*2 Displays the video, photo, music files numbers, and index numbers for VIDEO CDs.
*3 Displays Super VCD as "SVCD."
*4 Displays the date for photo files.

→continued

List of Control Menu items

Item	Item Name, Function
	TITLE/SCENE/TRACK
	CHAPTER/INDEX
	TRACK Selects the title, scene, track, chapter, or index to be played. **1** Press ↑/↓ to select the search method. "** (**)" is selected (** refers to a number). **2** Press ENTER. "** (**)" changes to "-- (**)." **3** Press the number buttons to select the number you want to search. **4** Press ENTER.
	TIME/TEXT Checks the elapsed time and the remaining playback time. Input the time code for picture and music searching (DVD and DivX video files only). **1** Press ENTER. **2** Input the time code using the number buttons, then press ENTER. For example, to find the scene at 2 hours, 10 minutes, and 20 seconds after the beginning, just enter "2:10:20." Note: You cannot search for a scene on a DVD+RW/DVD+R/DVD+R DL using the time code.
	DISC/USB for DVP-NS728H and DVP-NS728HP only (page 29) Selects either USB or DISC playback mode.
	ORIGINAL/PLAY LIST Selects the type of titles (DVD-VR mode) to be played, the ORIGINAL one, or an edited PLAY LIST.
	PROGRAM (page 23) Selects the title, chapter, or track to play in the order you want.
	SHUFFLE (page 24) Plays the title, chapter, or track in random order.
	REPEAT (page 24) Plays all titles/tracks/albums or a single title/chapter/track/album/file repeatedly.
	A-B REPEAT (page 25) Specifies the parts you want to play repeatedly.
	PARENTAL CONTROL (page 27) Set to prohibit playback on this player.
	SETUP (page 15, 32) QUICK: Use Quick Setup to choose the desired language of the on-screen display, the aspect ratio of the TV and the audio output signal. CUSTOM: In addition to the Quick Setup setting, you can adjust various other settings. RESET: Returns the settings in "SETUP" to the default setting.
	ZOOM Magnifies the image up to four times the original size, and scroll using ←/↑/↓/→. To return to normal view, press CLEAR. This function is available for all pictures except a background image.
	ANGLE Changes the angle.
	CUSTOM PICTURE MODE (page 26) Selects the picture quality that best suits the programme you are watching.
	SHARPNESS (page 26) Exaggerates the outline of the image to produce a sharper picture.
	AV SYNC (page 26) Adjust the delay between the picture and sound.
	TVS (TV Virtual Surround) Selects surround sound effect when connecting a stereo TV or 2 front speakers. This only works when playing a multichannel Dolby audio sound track. Furthermore, if the player is set up to output the signal from the DIGITAL OUT (COAXIAL)/HDMI OUT jack, the surround effect will only be heard when "DOLBY DIGITAL" is set to "D-PCM" and "MPEG" is set to "PCM" in "AUDIO SETUP" (page 36). The default setting is underlined. • OFF Cancels the setting. • TVS DYNAMIC THEATER • TVS DYNAMIC • TVS WIDE This mode is effective when the distance between the front L and R speakers is short, such as with built-in speakers on a stereo TV. • TVS NIGHT This feature is useful when you want to hear the dialogue and enjoy the surround sound effects of "TVS WIDE" at low volume. • TVS STANDARD Use this setting when you want to use TVS with 2 separate speakers. Notes: • When you select one of the TVS modes, turn off the surround setting of the connected TV or audio component. • The TVS effects do not work when using the Fast Play or Slow Play functions, even though you can change the TVS modes. • If you use the DIGITAL OUT (COAXIAL)/HDMI OUT jack and set "DOLBY DIGITAL" to "DOLBY DIGITAL," "MPEG" to "MPEG," and "DTS" to "ON" in "AUDIO SETUP," sound will come from your speakers but it will not have the surround effect.

Tip: The Control Menu icon indicator lights up in green → when you select any item except "OFF" ("PROGRAM," "SHUFFLE," "REPEAT," "A-B REPEAT," "SHARPNESS," "ZOOM," "TVS" only). The "ORIGINAL/PLAY LIST" indicator lights up in green when you select "PLAY LIST" (default setting). The "ANGLE" indicator lights up in green when you can change the angle. The "CUSTOM PICTURE MODE" indicator lights up in green when any setting other than "STANDARD" is selected. The "AV SYNC" indicator lights up in green when set to more than 0 ms.

◆ Items for DATA discs or USB (DVP-NS728H and DVP-NS728HP only)

Item	Item Name, Function
	ALBUM Selects the album that contains music and photo files to be played.
	FILE Selects the photo file to be played.
	ALBUM Selects the album that contains video file to be played.
	FILE Selects the video file to be played.
	DATE Displays the date the picture was taken by a digital camera.
	INTERVAL (page 30) Specifies the duration for which the slides are displayed on the screen.
	EFFECT (page 31) Selects the effects to be used for changing slides during a slide show.
	MEDIA VIDEO: plays video files. PHOTO/MUSIC: plays photo and music files as a slide show. PHOTO (BGM): plays photo files with the player's internal background sound. To choose the melody of the background sound, press AUDIO repeatedly while viewing the image. MUSIC: plays music files. Notes: • For details on playable files, see "Playable Media" page 43. • Depending on the contents, the player will play all files regardless of the "MEDIA" settings.

Playback

Guide to the 'BRAVIA Sync' Display

You can control the player by selecting the SYNC MENU button on the TV's remote or TV's option menu.

'BRAVIA Sync' display

The 'BRAVIA Sync' display will show different items depending on the disc type.

Example: 'BRAVIA Sync' display when playing a DVD VIDEO

Select an item using ←/↑/↓/→ and then press ENTER.

◆ When playing a DVD VIDEO
Displays MENU and TOP MENU.

◆ When playing in DVD-VR mode
Displays ⏮, ⏭, and chapter number.

◆ When playing a CD, VIDEO CD, or Super VCD (without PBC)
Displays ⏮, ⏭, and track number.

◆ When playing a VIDEO CD or Super VCD (with PBC) (page 18)
Displays ⏮, ⏭, and scene number.
When the disc's menu appears, you can select an item by pressing ↑/↓.

◆ When playing video, photo, and music files
Displays MENU and PICT. NAVI (Picture Navigation).

To change the display
Press SYNC MENU on the TV's remote repeatedly to turn or change the display. 'BRAVIA Sync' display and Control Menu are displayed alternately.

To turn off the display
Press RETURN or SYNC MENU button on the TV's remote repeatedly.

Tip: You can also control these functions on the player's remote.

Notes:
• The items in the 'BRAVIA Sync' display have the same functions as the player's remote buttons (page 6).
• You can only use this function if your TV supports the 'BRAVIA Sync'.
• For more details of 'BRAVIA Sync', please refer to the operating instructions supplied with the TV.

Various Play Mode Functions

You can set the following play modes:
• Programme Play (page 23)
• Shuffle Play (page 24)
• Repeat Play (page 24)
• A-B Repeat Play (page 25)

Note:
The play mode is cancelled when:
– you open the disc tray.
– you remove the USB device (DVP-NS728H and DVP-NS728HP only).
– you press I/⏻ and the player enters standby mode.
– you change the setting of "DISC/USB" (DVP-NS728H and DVP-NS728HP only).

Creating your own programme (Programme Play)

DVD Video VCD CD

You can play the contents in the order you want. You can programme up to 99 titles, chapters, and tracks.

1 After selecting (PROGRAM) on the Control Menu (page 19), press ↑/↓ to select "SET →," then press ENTER.
"TRACK" is displayed when you play a VIDEO CD or CD.

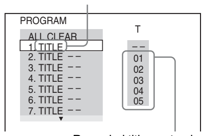

Recorded titles or tracks

2 Press →.
The cursor moves to the title or track row "T" (in this case, "01").

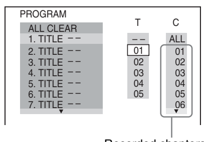

Recorded chapters

3 Select the title, chapter, or track you want to programme.

◆ When playing a DVD VIDEO
For example, select chapter "03" of title "02."
Press ↑/↓ to select "02" under "T," then press ENTER.

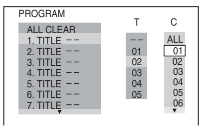

Next, press ↑/↓ to select "03" under "C," then press ENTER.

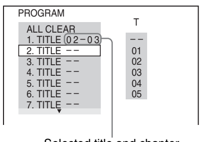

Selected title and chapter

◆ When playing a VIDEO CD or CD
For example, select track "02."
Press ↑/↓ to select "02" under "T," then press ENTER.

Playback

→continued

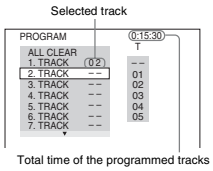

4 Repeat steps 2 to 3, to programme other titles, chapters, or tracks.
The programmed titles, chapters, and tracks are displayed in the selected order.

5 Press ►.
Programme Play begins.
When the programme ends, you can restart the same programme again by pressing ►.

To return to normal play
Press CLEAR, or select "OFF" in step 1. To play the same programme again, select "ON" in step 1 and press ENTER.

To change or cancel a programme

1 Follow step 1 of "Creating your own programme (Programme Play)."
2 Select the programme number of the title, chapter, or track you want to change or cancel using ↑/↓ and press →. If you want to delete the title, chapter, or track from the programme, press CLEAR.
3 Follow step 3 of "Creating your own programme (Programme Play)" for new programming. To cancel a programme, select "--" under "T," then press ENTER.

To cancel all of the titles, chapters, or tracks in the programmed order
Press ↑ and select "ALL CLEAR" in step 2 of "Creating your own programme (Programme Play)" and press ENTER.

You can perform Repeat Play or Shuffle Play of programmed titles, chapters, or tracks. During Programme Play, follow the steps of Repeat Play (page 24) or Shuffle Play (page 24).

- When you programme tracks on a Super VCD, the total playing time is not displayed.
- You cannot use this function with VIDEO CDs or Super VCDs with PBC playback.

Playing in random order (Shuffle Play) DVD Video VCD CD

You can have the player "shuffle" titles, chapters, or tracks. Subsequent "shuffling" may produce a different playing order.

1 After selecting (SHUFFLE) on the Control Menu (page 19), press ↑/↓ to select the item to be shuffled.

◆ When playing a DVD VIDEO
- TITLE
- CHAPTER

◆ When playing a VIDEO CD or CD
- TRACK

◆ When Programme Play is activated
- ON: shuffles titles, chapters, or tracks selected in Programme Play

2 Press ENTER.
Shuffle Play starts.

To return to normal play
Press CLEAR, or select "OFF" in step 1.

- You can set Shuffle Play while the player is stopped. After selecting the "SHUFFLE" option, press ►. Shuffle Play starts.
- Up to 200 chapters in a disc can be played in random order when "CHAPTER" is selected.

You cannot use this function with VIDEO CDs or Super VCDs with PBC playback.

Playing repeatedly (Repeat Play) DVD Video DVD+VR VCD CD DATA

You can play all of the titles or tracks, or a single title, chapter, or track repeatedly. You can use a combination of Shuffle or Programme Play modes.

1 After selecting (REPEAT) on the Control Menu (page 19), press ↑/↓ to select the item to be repeated.

- DISC: repeats all of the titles, tracks, or albums. (Select ORIGINAL or PLAY LIST in DVD-VR mode)
- USB: repeats all albums (DVP-NS728H and DVP-NS728HP only)
- TITLE: repeats the current title
- CHAPTER: repeats the current chapter
- TRACK: repeats the current track
- FILE (video files only): repeats the current file
- ALBUM: repeats the current album

◆ When Programme Play or Shuffle Play is activated
- ON: repeats Programme Play or Shuffle Play

2 Press ENTER.
Repeat Play starts.

To return to normal play
Press CLEAR, or select "OFF" in step 1.

You cannot use this function with VIDEO CDs or Super VCDs with PBC playback.

Repeating a specific portion (A-B Repeat Play)

DVD Video DVD+VR VCD CD

You can play a specific portion of a title, chapter, or track repeatedly.

1 After selecting (A-B REPEAT) on the Control Menu (page 19), press ↑/↓ to select "SET →," then press ENTER.
The "A-B REPEAT" setting bar appears.

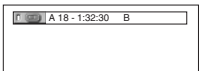

2 During playback, when you find the starting point (point A) of the portion to be played repeatedly, press ENTER.
The starting point (point A) is set.

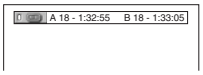

3 When you reach the ending point (point B), press ENTER again.
The set points are displayed and the player starts repeating this specific portion.

To return to normal play
Press CLEAR, or select "OFF" in step 1.

- A-B Repeat Play does not work across multiple titles.
- You may not set A-B Repeat Play for contents in DVD-VR mode that contains still pictures.

Customizing the Playback Configuration

Adjusting the playback picture (CUSTOM PICTURE MODE)

DVD Video DVD+VR VCD DATA

You can adjust the video signal from the player to obtain the picture quality you want.

1 After selecting (CUSTOM PICTURE MODE) on the Control Menu (page 19), press ↑/↓ to select the setting you want.
The default setting is underlined.
- STANDARD: displays a standard picture
- DYNAMIC 1: produces a bold dynamic picture by increasing the picture contrast and the colour intensity
- DYNAMIC 2: produces a more dynamic picture than DYNAMIC 1 by further increasing the picture contrast and colour intensity
- CINEMA 1: enhances details in dark areas by increasing the black level
- CINEMA 2: white colours become brighter and black colours become richer, and the colour contrast is increased
- MEMORY→: adjusts the picture in greater detail

PICTURE	Changes the contrast.
BRIGHTNESS	Changes the overall brightness.
COLOR	Makes the colours deeper or lighter.
HUE	Changes the colour balance.

2 Press ENTER.
The selected setting takes effect.

When you watch a movie, "CINEMA 1" or "CINEMA 2" is recommended.

- This function does not work when "PhotoTV HD" mode is activated (page 30).
- This function does not work if your TV supports Theatre mode and it is set to "On." For more details, refer to the operating instructions supplied with the TV.

Sharpening the picture (SHARPNESS) DVD Video DVD+VR VCD DATA

You can enhance the outlines of images to produce a sharper picture.

1 After selecting (SHARPNESS) on the Control Menu (page 19), press ↑/↓ to select a level.
The default setting is underlined.
- OFF: cancels this option
- 1: enhances the outline
- 2: enhances the outline more than 1

2 Press ENTER.
The selected setting takes effect.

- This function does not work when "PhotoTV HD" mode is activated (page 30).
- This function does not work if your TV supports Theatre mode and it is set to "On." For more details, refer to the operating instructions supplied with the TV.

Adjusting the delay between the picture and sound (AV SYNC) DVD Video DVD+VR VCD DATA

When the sound does not match the pictures on the screen, you can adjust the delay between the picture and sound.

1 After selecting (AV SYNC) on the Control Menu (page 19), press → to select "SET →," then press ENTER.
The "AV SYNC" adjustment bar appears.

2 Press → repeatedly to adjust the delay.
Each time you press ←/→, the delay is adjusted by 10 milliseconds.

3 Press ENTER.
The selected setting takes effect.

To reset the "AV SYNC" setting
Press CLEAR in step 2.

- This function is not effective if you use the DIGITAL OUT (COAXIAL) jack, and set "DOLBY DIGITAL," "MPEG," or "DTS" in "AUDIO SETUP" to "DOLBY DIGITAL," "MPEG," or "ON" respectively (page 36).
- This function is not effective if you connect a Dolby Digital or DTS-compliant device via the HDMI OUT jack, and set "DOLBY DIGITAL," "MPEG," or "DTS" in "AUDIO SETUP" to "DOLBY DIGITAL," "MPEG," or "ON" respectively (page 36).
- For DATA disc or USB (DVP-NS728H and DVP-NS728HP only), this function works for video files only.

Locking discs (PARENTAL CONTROL)

You can set two kinds of playback restrictions as following:
- Custom Parental Control
- Parental Control

After selecting (PARENTAL CONTROL) on the Control Menu (page 19), the options appear as shown below.
Select the option you want.
The default setting is underlined.
- ON →: Sets the playback restrictions so that the player will not play inappropriate discs (Custom Parental Control)
- PLAYER →: Playback of some DVD VIDEOs can be limited according to a predetermined level such as the age of the users. Scenes may be blocked or replaced with different scenes (Parental Control). See "Parental Control (limited playback)" (page 27) for detailed settings
- PASSWORD →: Enter a 4-digit password using the number buttons. The same password is used for both Custom Parental Control and Parental Control. Also use this menu to change the password
- OFF →: Turns off the Custom Parental Control function

Parental Control (limited playback)
DVD Video
You can set a playback limitation level.

1 After selecting (PARENTAL CONTROL) on the Control Menu (page 19), press ↑/↓ to select "PLAYER →," then press ENTER.
The password is required.
2 Enter or re-enter your 4-digit password using the number buttons, then press ENTER.
The display for setting the playback limitation level appears.
3 Press ↑/↓ to select "STANDARD," then press ENTER.
The selection items for "STANDARD" are displayed.
4 Press ↑/↓ to select a geographic area as the playback limitation level, then press ENTER.
The area is selected.
When you select "OTHERS →," select and enter a standard code in the table on page 47 using the number buttons.
5 Press ↑/↓ to select "LEVEL," then press ENTER.
The selection items for "LEVEL" are displayed.
6 Select the level you want using ↑/↓, then press ENTER.
Parental Control setting is complete.
The lower the value, the stricter the limitation.

To turn off the Parental Control function, set "LEVEL" to "OFF."

→continued

If you forget your password, remove the disc and repeat step 1 of "Parental Control (limited playback)." When you are asked to enter your password, enter "199703" using the number buttons, then press ENTER. The display will ask you to enter a new 4-digit password. After you enter a new 4-digit password, replace the disc in the player and press ►. When the display for entering your password appears, enter your new password.

Depending on the disc, you may be asked to change the parental control level while playing the disc. In this case, enter your password, then change the level. If the Resume Play mode is cancelled, the level returns to the previous level.

Playing Video, Photo, and Music Files DATA

The player can play video, photo, or music files. For details on playable files, see "Playable Media" page 43.

DATA CDs recorded in KODAK Picture CD format automatically start playing when inserted.

1 Press MENU.

The list of albums appears.

2 Press ↑/↓ to select the album.

3 Press ►.

Playback starts from the selected album.

To select a specific video or music file, press ENTER and press ↑/↓ to select a track or file, and then press ENTER.
To select a specific photo file, see "Selecting a photo file" (page 29).

To stop playback
Press ■.

To go to the next or previous page
Press → or ←.

To return to the previous display
Press RETURN.

To go to the next or previous music and video files
Press ▶▶I or I◀◀ during playback.
Note that you cannot return to the previous album by using I◀◀, and that you need to select the previous album from the album list.

To turn the display on or off
Press MENU repeatedly.

To play music with lyrics
Press SUBTITLE while playing music files that contain unsynchronized lyric information. To display next/previous line, press ↑/↓.

- By setting "MEDIA" to "PHOTO/MUSIC," you can view a slideshow with sound when the music and photo files are placed in the same album.
- Set "MEDIA" to "MUSIC" to enable lyrics function.
- Depending on the contents, the player will play all files regardless of the "MEDIA" settings.
- If the number of viewing times is preset, you can play DivX video files as many times as the preset number. The following occurrences are counted:
  – when the disc tray is opened.
  – when another file is played.
  – when "DISC/USB" (DVP-NS728H and DVP-NS728HP only) or "MEDIA" settings are changed.

The player supports MP3 ID3 Lyrics only.

Playing video, photo, and music files from USB device (DVP-NS728H and DVP-NS728HP only)

1 After connecting the USB device (page 16), select (DISC/USB) on the Control Menu (page 19).

2 Press ENTER.
The default setting is underlined.
- DISC: Plays files from a disc
- USB: Plays files from a USB device

3 Select USB and follow step 3 of "Playing Video, Photo, and Music Files" (page 28) to start playback.
You can change to DISC mode automatically by pressing ⏏ without turning on the Control Menu display. Press ► to start disc playback.

- For some device, LUN (Logical Unit Number) may appear. To change the LUN or original storage, press II► •→ when the list of albums or tracks is displayed.
- If the number of viewing times is preset, you can play DivX video files as many times as the preset number. The following occurrences are counted:
  – when ⏏ is pressed.
  – when another file is played.
  – when the player is turned off. This includes when the player is automatically turned off by the Auto Power Off function. Press II instead of ■ to stop viewing.
  – when USB device is removed.
  – when "DISC/USB" or "MEDIA" settings are changed.

Selecting a photo file

1 Press MENU.
The list of albums appears.

2 Press ↑/↓ to select the album, then press PICTURE NAVI.
The image files in the album appear in 16 subscreens. A scroll box is displayed on the right.

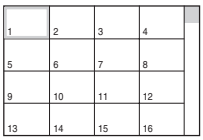

To display additional images, select a bottom image and press ↓. To return to a previous image, select a top image and press ↑.

3 Press ←/↑/↓/→ to select the image you want to view, and press ENTER.
The selected image appears.

To go to the next or previous photo file
Press ← or → during playback.
Note that you cannot return to the previous album by using ←. Select the previous album from the album list.

To rotate a photo image
Press ↑/↓ while viewing the image. Each time you press ↑, the image rotates counterclockwise by 90 degrees.
To return to normal view, press CLEAR.
Note that the view also returns to normal if you press ←/→ to go to the next or previous image.

Playback

→continued

To display photo information
Press SUBTITLE while viewing photo files. The detailed information for the selected photo file appears.
ϟ is displayed when the picture was taken using flash.
⍰ is displayed when the image is automatically rotated.
To hide the information, press SUBTITLE. Note that the above information may not appear depending on the digital camera.

To stop viewing the photo
Press ■.

PICTURE NAVI does not work if "MUSIC" is selected in "MEDIA" (page 21).

Viewing a high quality slide show (PhotoTV HD)

If you have a Sony TV that is compatible with "PhotoTV HD," you can enjoy the best quality images by the following connection and setting.

1 Connect the player to the TV using an HDMI cord (supplied with DVP-NS710HP, DVP-NS718HP, and DVP-NS728HP only).

2 Set the TV's video setting to "Video-A" mode.
For details about "Video-A," refer to the operating instructions supplied with the TV.

3 Set "JPEG RESOLUTION" to "PhotoTV HD" in "HDMI SETUP" (page 38).

On "PhotoTV HD"
"PhotoTV HD" allows for highly-detailed pictures, and photo-like expression of subtle textures and colors. By connecting Sony "PhotoTV HD" compatible devices using an HDMI cord, whole new world of photos can be enjoyed in breathtaking Full HD quality. For instance, the delicate texture of the human skin, flowers, sand, and waves can now be displayed on a large screen in beautiful photo-like quality.

- By connecting to a Sony "PhotoTV HD" compatible device using an HDMI cord, the TV will set the optimal image quality for viewing still picture automatically. For more details, refer to the operating instructions supplied with the TV.
- "PhotoTV HD" is activated when "JPEG RESOLUTION" is set to "PhotoTV HD," photo playback is available, and the player is connected to a TV by HDMI cord.
- You cannot select "CUSTOM PICTURE MODE" and "SHARPNESS," when "PhotoTV HD" mode is activated.
- When "PhotoTV HD" mode is activated, the player changes video signal output from "HDMI RESOLUTION" to "1920×1080i," "TV TYPE" to "16:9," and "YCBCR/RGB (HDMI)" to "YCBCR" automatically even though the current settings are kept.
- You cannot select "HDMI RESOLUTION" or "YCBCR/RGB (HDMI)" in "HDMI SETUP" (page 38), or "TV TYPE" in "SCREEN SETUP" (page 33), when "PhotoTV HD" mode is activated.
- If you set "PhotoTV HD" mode, the effect, rotation and zoom functions are not available.
- When "PhotoTV HD" mode is activated, the selection for "TV TYPE" is skipped during Quick Setup (page 15).

Setting the pace for a slide show (INTERVAL)

You can set the time the slides are displayed on the screen.

1 After selecting (INTERVAL) on the Control Menu (page 19), press ↑/↓ to select a setting.
The default setting is underlined.
- NORMAL: sets to standard duration
- FAST: sets a duration shorter than NORMAL
- SLOW 1: sets a duration longer than NORMAL
- SLOW 2: sets a duration longer than SLOW 1

2 Press ENTER.

Duration of interval depends on "JPEG RESOLUTION" setting in "HDMI SETUP" (page 38).

Selecting the slides' appearance (EFFECT)

You can select the way the slides are displayed during a slide show.

1 After selecting (EFFECT) on the Control Menu (page 19), press ↑/↓ to select a setting.
The default setting is underlined.
- MODE 1: the images randomly cycle through the effects
- MODE 2: the next image sweeps in from top left to bottom right
- MODE 3: the image sweeps in from top to bottom
- MODE 4: the image sweeps in from left to right
- MODE 5: the image stretches out from the centre of the screen
- OFF: turns off this function

2 Press ENTER.

- Note that this setting does not work if the JPEG file has rotation information.
- Depending on the "JPEG RESOLUTION" setting (page 38), some effect may not function.

Playback

Using the Setup Display

You can make various adjustments to items, such as picture and sound.
For details on each Setup Display item, see pages from 32 to 39.

Playback settings stored in the disc take priority over the Setup Display settings and not all of the functions described may work.

1 Press DISPLAY when the player is in stop mode.

The Control Menu appears.

2 Press ↑/↓ to select (SETUP), then press ENTER.

The options for "SETUP" appear.
- QUICK: makes the basic adjustments (page 15)
- CUSTOM: makes various adjustments
- RESET: resets all the settings explained on pages 32 to 39

3 Press ↑/↓ to select "CUSTOM," then press ENTER.

The Setup Display appears.
Select the setup category and adjust each item following the instructions on pages 32 to 39.

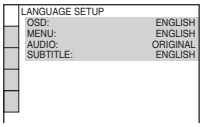

LANGUAGE SETUP

You can set various languages for the on-screen display or sound track.

◆ OSD (On-Screen Display)
Switches the display language on the screen.

◆ MENU (DVD VIDEO only)
You can select the desired language for the disc's menu.

◆ AUDIO (DVD VIDEO only)
Switches the language of the sound track. When you select "ORIGINAL," the language given priority in the disc is selected.

◆ SUBTITLE (DVD VIDEO only)
Switches the language of the subtitle recorded on the DVD VIDEO.
When you select "AUDIO FOLLOW," the language for the subtitles changes according to the language you selected for the sound track.

If you select "OTHERS →" in "MENU," "SUBTITLE," or "AUDIO," select and enter a language code from "Language Code List" on page 47 using the number buttons.

If you select a language in "MENU," "SUBTITLE," or "AUDIO" that is not recorded on a DVD VIDEO, one of the recorded languages will be automatically selected.

SCREEN SETUP

Choose settings according to the TV to be connected.

The default settings are underlined and differ depending on the player model.

◆ TV TYPE
Selects the aspect ratio of the connected TV (4:3 standard or wide).
You cannot select this when "PhotoTV HD" mode is activated (page 30).

16:9	Select this when connecting to a wide-screen TV or a TV with a wide mode function.
4:3 LETTER BOX	Select this when connecting to a 4:3 screen TV. Displays a wide picture with bands on the upper and lower portions of the screen.
4:3 PAN SCAN	Select this when connecting to a 4:3 screen TV. Automatically displays the wide picture on the entire screen and cuts off the portions that do not fit.

16:9

4:3 LETTER BOX

4:3 PAN SCAN

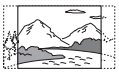

Depending on the DVD, "4:3 LETTER BOX" may be selected automatically instead of "4:3 PAN SCAN" or vice versa.

◆ COLOR SYSTEM (VIDEO CD)
Selects the colour system when you play a VIDEO CD.

AUTO	Outputs the video signal in the system of the VIDEO CD, either PAL or NTSC. If your TV is the DUAL system, select AUTO.
PAL	Changes the video signals of an NTSC VIDEO CD and outputs it in the PAL system.
NTSC	Changes the video signals of a PAL VIDEO CD and outputs it in the NTSC system.

◆ SCREEN SAVER
The screen saver image appears when the player in pause or stop mode for 15 minutes, or when you play a CD, or music files for more than 15 minutes. The screen saver will help prevent your display device from becoming damaged (ghosting). Press ► to turn off the screen saver.

ON	Turns on the screen saver.
OFF	Turns off the screen saver.

◆ BACKGROUND
Selects the background colour or picture on the TV screen when the player is in stop mode or while playing a CD, or music files.

JACKET PICTURE	The jacket picture (still picture) appears, but only when the jacket picture is already recorded on the disc (CD-EXTRA, etc.). If the disc does not contain a jacket picture, the "GRAPHICS" picture appears.
GRAPHICS	A preset picture stored in the player appears.
BLUE	The background colour is blue.
BLACK	The background colour is black.

◆ PROGRESSIVE (COMPONENT OUT ONLY)
If your TV accepts progressive (525p/625p) format signals, set "PROGRESSIVE (COMPONENT OUT ONLY)" to "ON."
Note that you must connect to a progressive format TV using the COMPONENT VIDEO OUT jacks (page 10).

→continued

OFF	To output normal (interlace) signals.
ON	To output progressive signals.

To output progressive signals

1 Select "PROGRESSIVE (COMPONENT OUT ONLY)," and press ENTER.
2 Select "ON," and press ENTER.
The display asks for confirmation.
3 Select "Start," and press ENTER.
The video switches to a progressive signal for 5 seconds.
4 If the picture appears normal, select "YES," and press ENTER.
If not, select "NO," and press ENTER.

To reset the setting
If the picture does not appear normal or goes blank, press I/⏻ to turn off the player, and enter "369" using the number buttons on the remote, then press I/⏻ to turn on the player again.

◆ MODE (PROGRESSIVE)
In order for these images to appear natural on your screen when output in progressive mode, the progressive video signal needs to be converted to match the type of DVD software that you are watching.
This setting is effective only when you set "PROGRESSIVE (COMPONENT OUT ONLY)" in "SCREEN SETUP" to "ON."

AUTO	Automatically detects the software type (film-based or video-based) and selects the appropriate conversion mode. Normally, select this position.
VIDEO	Fixes the conversion mode to the mode for video-based software.

◆ 4:3 OUTPUT
This setting is effective only when you set "TV TYPE" in "SCREEN SETUP" to "16:9." Adjust this to watch 4:3 aspect ratio.
If you can change the aspect ratio on your TV, change the setting on your TV, not the player.

FULL	Select this when you can change the aspect ratio on your TV.
NORMAL	Select this when you cannot change the aspect ratio on your TV. Shows a 16:9 aspect ratio signal with black bands on left and right sides of the image.

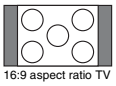

16:9 aspect ratio TV

For Taiwan model only

◆ BLACK LEVEL
Selects the black level (setup level) for the video signals output from the jacks other than COMPONENT VIDEO OUT/HDMI OUT.

ON	Sets the black level of the output signal to the standard level.
OFF	Lowers the standard black level. Use this when the picture becomes too white.

For Taiwan model only

◆ BLACK LEVEL (COMPONENT OUT)
Selects the black level (setup level) for the video signals output from the COMPONENT VIDEO OUT jacks. You cannot select this when the player outputs progressive signals (page 33).

OFF	Sets the black level of the output signal to the standard level. Normally, select this position.
ON	Raises the standard black level. Use this setting when the picture appears too dark.

CUSTOM SETUP

Use this to set up playback related and other settings.

The default settings are underlined and differ depending on the player model.

◆ AUTO POWER OFF
Switches the Auto Power Off setting on or off.

OFF	Switches this function off.
ON	The player enters standby mode when left in stop mode for more than 30 minutes.

◆ AUTO PLAY
Switches the Auto Play setting on or off. This function is useful when the player is connected to a timer (not supplied).

OFF	Switches this function off.
ON	Automatically starts playback when the player is turned on by a timer (not supplied).

◆ DIMMER
Adjusts the lighting of the front panel display.

BRIGHT	Makes the lighting bright.
DARK	Makes the lighting dark.
AUTO DARK	Makes the lighting dark if you do not operate the player or remote for a short while.

◆ PAUSE MODE (DVDs only)
Selects the picture in pause mode.

AUTO	The picture, including subjects that move dynamically, is output with no jitter. Normally, select this position.
FRAME	The picture, including subjects that do not move dynamically, is output in high resolution.

◆ TRACK SELECTION (DVD VIDEO only)
Gives the sound track which contains the highest number of channels priority when you play a DVD VIDEO on which multiple audio formats (PCM, MPEG audio, DTS, or Dolby Digital format) are recorded.

OFF	No priority given.
AUTO	Priority given.

- When you set the item to "AUTO," the language may change. The "TRACK SELECTION" setting has higher priority than the "AUDIO" settings in "LANGUAGE SETUP" (page 32).
- If you set "DTS" to "OFF" (page 37), the DTS sound track is not played even if you set "TRACK SELECTION" to "AUTO."
- If PCM, DTS, MPEG audio, and Dolby Digital sound tracks have the same number of channels, the player selects PCM, DTS, MPEG audio, and Dolby Digital sound tracks in this order.

◆ MULTI-DISC RESUME (DVD VIDEO/ VIDEO CD only)
Switches the Multi-disc Resume setting on or off. Resume playback can be stored in memory for up to 6 different DVD VIDEOs/ VIDEO CDs (page 17).

ON	Stores the resume setting in memory for up to 6 discs.
OFF	Does not store the resume setting in memory. Playback restarts at the resume point only for the current disc in the player.

If you run Quick Setup, Multi-disc Resume setting stored in memory may return to the default settings.

◆ DivX (Except DVP-NS710HP)
Displays the registration code for this player. For more information, go to
http://www.divx.com/vod
on the Internet.

AUDIO SETUP

You can set the sound according to the playback and connection conditions.

The default settings are underlined and differ depending on the player model.

◆ AUDIO DRC (Dynamic Range Control) (DVDs only)

Makes the sound clear when the volume is turned down when playing a DVD that conforms to "AUDIO DRC."
This function affects the output from the following jacks:
– LINE OUT L/R (AUDIO) jacks.
– DIGITAL OUT (COAXIAL)/HDMI OUT jack only when "DOLBY DIGITAL" is set to "D-PCM" (page 36).

STANDARD	Normally, select this position.
TV MODE	Makes low sounds clear even if you turn the volume down.
WIDE RANGE	Gives you the feeling of being at a live performance.

◆ DOWNMIX (DVDs only)

Switches the method for mixing down to 2 channels when you play a DVD which has rear sound elements (channels) or is recorded in Dolby Digital format. This function affects the output of the following jacks:
– LINE OUT L/R (AUDIO) jacks.
– DIGITAL OUT (COAXIAL)/HDMI OUT jack when "DOLBY DIGITAL" is set to "D-PCM" (page 36).

DOLBY SURROUND	Normally, select this position. Multi-channel audio signals are output to 2 channels for enjoying surround sounds.
NORMAL	Multi-channel audio signals are downmixed to 2 channels for use with your stereo.

◆ DIGITAL OUT

Selects if audio signals are output via the DIGITAL OUT (COAXIAL)/HDMI OUT jack.

ON	Normally, select this position. When you select "ON," see "Setting the digital output signal" for further settings.
OFF	The influence of the digital circuit upon the analogue circuit is minimal.

Setting the digital output signal

Switches the method of outputting audio signals when you connect a component such as an audio component or MD deck with a digital input jack.
For connection details, see page 12.
Select "DOLBY DIGITAL," "MPEG," "DTS," and "48kHz/96kHz PCM" after setting "DIGITAL OUT" to "ON."
If you connect a component that is incompatible with the selected audio signal, a loud noise (or no sound) may be heard from the speakers, risking damage to your ears or speakers.

- The AV SYNC function (page 26) is not effective if you use the DIGITAL OUT (COAXIAL) jack, and set "DOLBY DIGITAL," MPEG" or "DTS" to "DOLBY DIGITAL," "MPEG" or "ON" respectively.
- The AV SYNC function (page 26) is not effective if you connect a Dolby Digital or DTS-compliant device via the HDMI OUT jack, and set "DOLBY DIGITAL," "MPEG" or "DTS" to "DOLBY DIGITAL," "MPEG" or "ON" respectively.

◆ DOLBY DIGITAL (DVDs only)

Selects the type of Dolby Digital signal.

DOLBY DIGITAL	Select this when the player is connected to an audio component with a built-in Dolby Digital decoder.
D-PCM	Select this when the player is connected to an audio component without a built-in Dolby Digital decoder. You can select whether the signals conform to Dolby Surround (Pro Logic) or not by making adjustments to the "DOWNMIX" item in "AUDIO SETUP" (page 36).

If the HDMI OUT jack is connected to equipment not compatible with DOLBY DIGITAL signals, the "D-PCM" signals will be automatically output even when you select "DOLBY DIGITAL."

◆ MPEG (DVDs only)

Selects the type of MPEG audio signal.

PCM	Select this when the player is connected to an audio component without a built-in MPEG decoder. If you play multi-channel MPEG audio sound tracks, only the Front (L) and Front (R) signals will be output from your two front speakers.
MPEG	Select this when the player is connected to an audio component with a built-in MPEG decoder.

If the HDMI OUT jack is connected to equipment not compatible with MPEG audio signal, the "PCM" signals will be automatically output even when you select "MPEG."

◆ DTS

Selects the type of DTS audio signals.

OFF	Select this when the player is connected to an audio component without a built-in DTS decoder.
ON	Select this when the player is connected to an audio component with a built-in DTS decoder.

- When you play a DVD VIDEO with DTS sound tracks, set "DTS" to "ON" in "AUDIO SETUP" (page 37).
- If you connect the player to audio equipment without a DTS decoder, do not set "DTS" to "ON" in "AUDIO SETUP" (page 37). A loud noise may come out from the speakers, affecting your ears or causing the speakers to be damaged.
- If the HDMI OUT jack is connected to equipment not compatible with DTS signals, the "OFF" signals will be automatically output even when you select "ON."

◆ 48kHz/96kHz PCM (DVD VIDEO only)

Selects the sampling frequency of the audio signal.

48kHz/16bit	The audio signals of DVD VIDEOs are always converted to 48kHz/16bit.
96kHz/24bit	All types of signals including 96kHz/24bit are output in their original format. However, if the signal is encrypted for copyright protection purposes, the signal is only output as 48kHz/16bit.

- The analogue audio signals from the LINE OUT L/R (AUDIO) jacks are not affected by this setting and keep their original sampling frequency level.
- If the HDMI OUT jack is connected to equipment not compatible with 96 kHz/24 bit signals, 48 kHz/16 bit PCM will be automatically output even when you select "96kHz/24bit."

HDMI SETUP

You can adjust items related to the HDMI connection.

The default settings are underlined and differ depending on the player model.

◆ HDMI RESOLUTION

Selects the type of video signals output from the HDMI OUT jack. When you select AUTO (1920×1080p) (default), the player outputs video signals of the highest resolution acceptable for your TV. If the picture is not clear, natural or to your satisfaction, try another option that suits the disc and your TV/projector, etc. For details, refer also to the instruction manual supplied with the TV/projector, etc.
You cannot select this when "PhotoTV HD" mode is activated (page 30).

AUTO (1920×1080p)	Normally, select this.
1920×1080i	Sends 1920×1080i video signals.
1280×720p	Sends 1280×720p video signals.
720×480/576p	Sends 720×480/576p video signals.
PhotoTV HD	Displays extra highly-detailed picture when connecting to a Sony's "PhotoTV HD"-compatible device.
SD □	Displays standard definition picture with black frame.
HD □	Displays high definition picture with black frame.
HD	Displays high definition picture without black frame.
(1920×1080i) HD □	Displays high definition picture with black frame at 1920×1080 pixels.
(1920×1080i) HD	Displays high definition picture without black frame at 1920×1080 pixels.

To reset the setting

If the picture does not appear normal or goes blank, press I/⏻ to turn off the player, and enter "369" using the number buttons on the remote, then press I/⏻ to turn on the player again.

In case of "AUTO (1920×1080p)," the player automatically adjusts the video signals that are suitable for the TV.
Other cases, the player directly send the signal even if TV cannot accept.

◆ JPEG RESOLUTION

Selects the type of JPEG resolution so that you can enjoy high picture quality via your HDMI connection.
You cannot select this when "HDMI RESOLUTION" is set to "720×480/576p" or "TV TYPE" is set to "4:3 LETTER BOX" or "4:3 PAN SCAN."

- "(1920×1080i) HD □" and "(1920×1080i) HD" are effective only when you set "HDMI RESOLUTION" to "1920×1080i" and "TV TYPE" to "16:9."
- If you set this setting to "PhotoTV HD," "(1920×1080i) HD □" or "(1920×1080i) HD," effect, rotation, and zoom function are not available.
- If you want to use effect, rotation, and zoom function; sets this setting to "SD □," "HD □," or "HD."
- If you set this setting to "PhotoTV HD," "(1920×1080i) HD □" or "(1920×1080i) HD," next image appears after black mute.
- HDMI signal will stop momentarily during loading or unloading DATA disc or USB (DVP-NS728H and DVP-NS728HP only).
- When you set to "PhotoTV HD," the player changes video signal output from "HDMI RESOLUTION" to "1920×1080i," "TV TYPE" to "16:9," and "YCBCR/RGB (HDMI)" to "YCBCR" automatically even though the current settings are kept.
- Set this setting to "SD □," when you want to view photo files in analogue video outputs with the HDMI connection.

◆ YCBCR/RGB (HDMI)

Selects the type of HDMI signal output from HDMI OUT jack.
You cannot select this when "PhotoTV HD" mode is activated (page 30).

YCBCR	Outputs YCBCR signals.
RGB	Outputs RGB signals.

- If the playback picture becomes distorted, set this setting to "RGB."
- If the HDMI OUT jack is connected to equipment with a DVI jack, "RGB" signals will be automatically output even when you select "YCBCR."

◆ AUDIO (HDMI)

Selects the type of audio signal output from the HDMI OUT jack.

AUTO	Normally, select this. Outputs audio signals according to the "DIGITAL OUT" settings (page 36).
PCM	Converts Dolby Digital, MPEG, or 96 kHz/24 bit PCM signals to 48 kHz/16 bit PCM.

A loud noise (or no sound) will be output if you connect the player to a TV that is not compatible with DOLBY DIGITAL/DTS/MPEG signals and "AUTO" is selected. In this case, select "PCM."

◆ CONTROL FOR HDMI

Switches the Control For HDMI setting on or off.

ON	Allows you to use the CONTROL FOR HDMI features (page 11).
OFF	Switches this function off.

◆ LANGUAGE FOLLOW

Switches the languages of the DVD player to the same as the current TV OSD language.
You cannot select this when "CONTROL FOR HDMI" is set to "OFF."

ON	Switches this function on.
OFF	Switches this function off.

- Turn off any display before using this function.
- The OSD language for player keeps if the TV's language cannot be supported.

Troubleshooting

If you experience any of the following difficulties while using the player, use this troubleshooting guide to help remedy the problem before requesting repairs. Should any problem persist, consult your nearest Sony dealer.

Power

The power is not turned on.

➡ Check that the mains lead is connected securely.

Picture

There is no picture/picture noise appears.

➡ Re-connect the connecting cable securely.
➡ The connecting cables are damaged.
➡ Check the connection to your TV (page 10) and switch the input selector on your TV so that the signal from the player appears on the TV screen.
➡ The disc is dirty or flawed.
➡ The disc is recorded in a colour system that is different from your TV.
➡ You set the "PROGRESSIVE (COMPONENT OUT ONLY)" to "ON" in "SCREEN SETUP" (page 33) even though your TV cannot accept the progressive signal. In this case, refer to page 34 to reset the setting.
➡ If the colour system of your player does not match with that of your TV, change the colour system of the player. For details, see page 8. (You cannot change the colour system of the DVD disc itself.)
➡ Even if your TV is compatible with progressive format 525p/625p signals and connected using COMPONENT VIDEO OUT jacks, the image may be affected when you set the player to progressive format. In this case, set the "PROGRESSIVE (COMPONENT OUT ONLY)" in "SCREEN SETUP" to "OFF" (page 33) so that the player is set to normal (interlace) format.
➡ The player is connected to an input device that is not HDCP compliant. See page 11.
➡ If the HDMI OUT jack is used for video output, changing the "HDMI RESOLUTION" setting in "HDMI SETUP" may solve the problem (page 38). Connect the TV and the player using a video jack other than the HDMI OUT, and switch the TV's input to the connected video input so that you can see the on-screen displays. Change the "HDMI RESOLUTION" setting in "HDMI SETUP," and switch the TV's input back to HDMI. If the picture still does not appear, repeat the steps and try other options.
➡ Press I/⏻ to turn off the player, and enter "369" using the number buttons on the remote, then press I/⏻ to turn on the player again (page 38).

There is no picture/picture noise appears when connected to the HDMI OUT jack.

➡ Try the following: ①Turn the player off and on again. ②Turn the connected equipment off and on again. ③Disconnect and then connect the HDMI cord again.

Sound

There is no sound.

➡ Re-connect the connecting cable securely.
➡ The connecting cable is damaged.
➡ The player is connected to the wrong input jack on the audio component (page 12).
➡ The audio component input is not correctly set.
➡ The player is in pause mode or in Slow-motion Play mode.
➡ The player is in fast forward or fast reverse mode.
➡ If the audio signal does not come through the DIGITAL OUT (COAXIAL)/HDMI OUT jack, check the audio settings (page 36).
➡ While playing a Super VCD on which the audio track 2 is not recorded, no sound will come out when you select "2:STEREO," "2:1/L," or "2:2/R." Press AUDIO to select the recorded track.
➡ When playing multichannel MPEG audio sound tracks, only the Front (L) and Front (R) signals will be output from two front speakers.
➡ The equipment connected to the HDMI OUT jack does not conform to the audio signal format, in this case set "AUDIO (HDMI)" in "HDMI SETUP" to "PCM" (page 38).

No sound is output from the HDMI OUT jack

➡ Try the following: ①Turn the player off and on again. ②Turn the connected equipment off and on again. ③Disconnect and then connect the HDMI cord again.
➡ The HDMI OUT jack is connected to a DVI device (DVI jacks do not accept audio signals).

The sound volume is low.

➡ The sound volume is low on some DVDs. The sound volume may improve if you set "AUDIO DRC" in "AUDIO SETUP" to "TV MODE" (page 36).

Operation

The remote does not function.

➡ The batteries in the remote are weak.
➡ There are obstacles between the remote and the player.
➡ The distance between the remote and the player is too far.
➡ The remote is not pointed at the remote sensor on the player.

The disc does not play.

➡ The disc is turned over.
Insert the disc with the playback side facing down.
➡ The disc is skewed.
➡ The player cannot play certain discs (page 2).
➡ The region code on the DVD does not match the player.
➡ Moisture has condensed inside the player (page 3).
➡ The player cannot play a recorded disc that is not correctly finalized (page 44).

The album/track/file names are not displayed correctly.

➡ The player can only display numbers and alphabet. Other characters are displayed as "*".

The disc does not start playing from the beginning.

➡ Programme Play, Shuffle Play, Repeat Play, or A-B Repeat Play is selected (page 23).
➡ Resume play has taken effect (page 17).

"Copyright lock" appears and the screen turns blue when playing in DVD-VR mode.

➡ Images taken from digital broadcasts, etc., may contain copy protection signals, such as complete copy protection signals, single copy signals, and restriction-free signals. When images that contain copy protection signals are played, a blue screen may appear instead of the images. It may take a while when looking for playable images. (For player that cannot play images that contain a copy protection only)

Some functions such as Stop, Fast Play, Slow Play, Slow-motion Play, Repeat Play, Shuffle Play, or Programme Play cannot be performed.

➡ Depending on the disc, you may not be able to do some of the operations above.

The player does not operate properly.

➡ When static electricity, etc., causes the player to operate abnormally, unplug the player.

5 numbers or letters are displayed on the screen.

➡ The self-diagnosis function was activated. (See the table on page 42.)

The disc tray does not open and "LOCKED" appears on the front panel display.

➡ Child Lock is set (page 8).

The disc tray does not open and "TRAY LOCKED" appears on the front panel display.

➡ Contact your Sony dealer or local authorized Sony service facility.

"Data error" appears on the TV screen when playing video, photo, and music files.

➡ The video, photo, and music files you want to play is broken.

➡continued

The CONTROL FOR HDMI function does not work.

➡ Make sure that the connected component is compatible with the CONTROL FOR HDMI function. Please refer to the operating instructions of the component for detailed explanation.
➡ Make sure that the TV's input is switched to DVD player so that the signal from the player appears on the TV screen, and "CONTROL FOR HDMI" is set to "ON" (page 39).

'BRAVIA Sync' display does not appear.

➡ Turn off any display of the DVD player displays. Then, try again.
➡ Please return to the one screen mode if your TV is in two screen mode. Then, try again.

Your TV automatically turns on or the TV's input is switched to the player.

➡ "CONTROL FOR HDMI" is set to "ON" (page 39). Switch this function to "OFF".

Display language on the screen switches automatically.

➡ When "LANGUAGE FOLLOW" is set to "ON" in the "HDMI SETUP" (page 39), the display language on the screen automatically switches, according to the language setting of the connected TV, if you change the language settings on your TV, etc.

USB (DVP-NS728H and DVP-NS728HP only)

The player does not detect a USB device connected to the player.

➡ The USB device is not securely connected to the player (page 16).
➡ The USB device or a cable is damaged.
➡ Disc mode has not been switched to USB mode.
➡ Compatibility with all encoding/writing softwares, recording devices, and recording media cannot be guaranteed. Incompatible USB device may produce noise or interrupted audio or may not play at all.

Self-diagnosis Function

(When letters/numbers appear on the screen)

When the self-diagnosis function is activated to prevent the player from malfunctioning, a five-character service number (e.g., C 13 50) with a combination of a letter and four digits appears on the screen. In this case, check the following table.

First three characters of the service number	Cause and/or corrective action
C 13	The disc is dirty or recorded in a format that this player cannot play (page 43). ➡Clean the disc with a cleaning cloth or check its format.
C 31	The disc is not inserted correctly. ➡Re-insert the disc correctly.

Playable Media

Type	Disc Logo	Icon	Characteristic
DVD VIDEO	DVD VIDEO, DVD RW, DVD R 4.7	DVDVideo	• Commercial DVD • DVD+RWs/DVD+Rs/DVD+R DLs in +VR mode • DVD-RWs/DVD-Rs/DVD-R DLs in video mode
DVD-VR mode	RW DVD+ReWritable, RW DVD+R, RW DVD+R DL	DVDVR	• DVD-RWs/DVD-Rs/DVD-R DLs in VR (Video Recording) mode
CD	COMPACT disc DIGITAL AUDIO	CD	• Music CD • CD-Rs/CD-RWs in music format
VIDEO CD	COMPACT disc DIGITAL VIDEO	VCD	• Super VCDs • CD-Rs/CD-RWs in video CD/Super VCD format
DATA disc or USB*1	–	DATA	• DATA CD/DATA DVD or USB*1 devices containing video*2, photo, or music files

*1 DVP-NS728H and DVP-NS728HP only.
*2 DVP-NS710HP can play video files in MPEG-1 format only.

Notes about video, photo, or music files that the player can play

The player can play the following files:

File Type	File format	Extension
Video	DivX*1*2	".avi" or ".divx"
	MPEG-1*3	".mpg" or ".mpeg"
	MPEG-4 (simple profile)*1*4	".mp4" or ".m4v"
Photo	JPEG	".jpeg" or ".jpg"
Music	MP3*5	".mp3"
	WMA*4	".wma"
	AAC*4	".m4a"
	LPCM/WAVE	".wav"

*1 Except DVP-NS710HP.
*2 DivX® is a video file compression technology, developed by DivX, Inc.
DivX, DivX Certified, and associated logos are trademarks of DivX, Inc. and are used under license.
*3 Only support movie data of cyber shot.
*4 Files with copyright protection (Digital Right Management) cannot be played.
*5 MP3 (MPEG-1 Audio Layer III) is a standard format defined by ISO (International Organization for Standardization)/IEC (International Electrotechnical Commission) MPEG which compresses audio data.

The player will play any file in the above table, even if the file format differs. Playing such data may generate noise that can result in speaker damage. The player can play the following files:

- Photo files that conform to the DCF* image file format.
- DATA CDs recorded according to ISO 9660** Level 1/Level 2, or its extended format, Joliet.
- DATA DVDs recorded according to UDF (Universal Disk Format).

➡continued

* "Design rule for Camera File system": Image standards for digital cameras regulated by JEITA (Japan Electronics and Information Technology Industries Association).
** A logical format of files and folders on CD-ROMs, defined by ISO (International Organization for Standardization).

- If you add numbers (01, 02, 03, etc.) to the front of the file names, the files will be played in that order.
- To play a complex hierarchy of folders may take some time. Create albums with no more than two hierarchies.
- Set "MEDIA" to "PHOTO/MUSIC" to repeat both music and photo files. See "Playing repeatedly (Repeat Play)" page 24.

- Some video, photo, and music files may not play, depending on the encoding/recording condition.
- To start playback and proceed to the next or another album may take some time.
- The player cannot play music files in mp3PRO or WMA Pro format.
- If the playing time of either music or photo is longer, the longer one continues without sound or image.
- To display Progressive photo files or photo files of 3,000,000 pixels or more may take time and the duration may seem longer than your selected setting.
- The player will recognize a maximum of 200 albums, regardless of the selected mode. It can recognize up to 300 music files and 300 photo files when "PHOTO/MUSIC" is selected, 600 music files when "MUSIC" is selected, 600 photo files when "PHOTO (BGM)" is selected, and 600 video files when "VIDEO" is selected.
- The player may not play a combination of two or more video files.
- The player cannot play a video file of size more than 720 (width) × 576 (height)/2 GB.
- The player may not play certain video files that are longer than 3 hours.
- Depending on the file, normal playback may not be possible. The picture may be unclear, playback may not appear smooth, the sound may skip, etc. You are recommended to create the file at a lower bit rate.
- The player may not playback the high bit rate video file on the DATA CD smoothly. You are recommended to playback using DATA DVD.
- When playing visual data that is not supported by MPEG-4 format, only sound will be heard.

Region code

Your player has a region code printed on the back of the unit and only will play commercial DVDs (playback only) labelled with identical region codes. This system is used to protect copyrights.

Commercial DVDs labelled (ALL) will also play on this player.

Depending on the commercial DVD, there may be no region code indication, even though playing the commercial DVD is prohibited by area restrictions.

- **Notes about recordable media**
  Some recordable media cannot be played on this player due to the recording quality or physical condition of the disc, or the characteristics of the recording device and authoring software.
  The disc will not play if it has not been correctly finalized. For more information, refer to the operating instructions for the recording device.
  Note that some playback functions may not work with some DVD+RWs/DVD+Rs/DVD+R DLs, even if they have been correctly finalized. In this case, view the disc by normal playback. Also some DATA discs created in Packet Write format cannot be played.
- **Music discs encoded with copyright protection technologies**
  This product is designed to playback discs that conform to the Compact Disc (CD) standard. Various music discs encoded with copyright protection technologies are marketed by some record companies. Please be aware that among those discs, there are some that do not conform to the CD standard and may not be playable by this product.
- **For player that cannot play images that contain a copy protection only**
  Images in DVD-VR mode with CPRM* protection may not be played if they contain a copy protection signal, "Copyright lock" appears on the screen.
  * CPRM (Content Protection for Recordable Media) is a coding technology that protects the copyright of images.

- **Note on DualDiscs**
  A DualDisc is a two sided disc product which mates DVD recorded material on one side with digital audio material on the other side. However, since the audio material side does not conform to the Compact Disc (CD) standard, playback on this product is not guaranteed.

Note on playback operations of DVDs and VIDEO CDs

Some playback operations of DVDs and VIDEO CDs may be intentionally set by software producers. Since this player plays DVDs and VIDEO CDs according to the disc contents the software producers designed, some playback features may not be available. Also, refer to the operating instructions supplied with the DVDs or VIDEO CDs.

About MPEG-4 VISUAL (Except DVP-NS710HP)

THIS PRODUCT IS LICENSED UNDER THE MPEG-4 VISUAL PATENT PORTFOLIO LICENSE FOR THE PERSONAL AND NON-COMMERCIAL USE OF A CONSUMER FOR DECODING VIDEO IN COMPLIANCE WITH THE MPEG-4 VISUAL STANDARD ("MPEG-4 VIDEO") THAT WAS ENCODED BY A CONSUMER ENGAGED IN A PERSONAL AND NON-COMMERCIAL ACTIVITY AND/OR WAS OBTAINED FROM A VIDEO PROVIDER LICENSED BY MPEG LA TO PROVIDE MPEG-4 VIDEO.
NO LICENSE IS GRANTED OR SHALL BE IMPLIED FOR ANY OTHER USE. ADDITIONAL INFORMATION INCLUDING THAT RELATING TO PROMOTIONAL, INTERNAL AND COMMERCIAL USES AND LICENSING MAY BE OBTAINED FROM MPEG LA, LLC. SEE HTTP://WWW.MPEGLA.COM

Specifications

System
Laser: Semiconductor laser

Outputs
(**Jack name:** Jack type/Output level/Load impedance)
LINE OUT (AUDIO):
Phono jack/2 Vrms/10 kilohms
DIGITAL OUT (COAXIAL):
Phono jack/0.5 Vp-p/75 ohms
HDMI OUT:
HDMI 19 pin-Standard Connector
COMPONENT VIDEO OUT (Y, P_B/C_B, P_R/C_R) (Taiwan model):
Phono jack/Y: 1.0 Vp-p/P_B/C_B, P_R/C_R: interlace*1 = 0.648 Vp-p, progressive or interlace*2 = 0.7 Vp-p/75 ohms
*1 BLACK LEVEL (COMPONENT OUT) is ON
*2 BLACK LEVEL (COMPONENT OUT) is OFF
COMPONENT VIDEO OUT (Y, P_B/C_B, P_R/C_R) (Model for other area):
Phono jack/Y: 1.0 Vp-p, P_B/C_B, P_R/C_R: 0.7 Vp-p/75 ohms
LINE OUT (VIDEO):
Phono jack/1.0 Vp-p/75 ohms
USB (DVP-NS728H and DVP-NS728HP only):
USB jack Type A, maximum current 500 mA (For connecting USB device)

General
Power requirements:
Taiwan model: 110 V AC, 60Hz
Model for other areas: 110 – 240 V AC, 50/60 Hz
See page 2 for further information.
Power consumption:
DVP-NS718H, DVP-NS710HP, and DVP-NS718HP: 10 W
DVP-NS728H and DVP-NS728HP: 12 W
Dimensions (approx.):
430 × 43 × 206 mm (width/height/depth) incl. projecting parts
Mass (approx.):
DVP-NS718H, DVP-NS710HP, and DVP-NS718HP: 1.5 kg
DVP-NS728H and DVP-NS728HP: 1.6 kg
Operating temperature: 5 °C to 35 °C
Operating humidity: 25 % to 80 %

Supplied accessories
- Audio/Video cable (phono plug × 3 ⟷ phono plug × 3) (1)
- Remote commander (remote) (1)
- R6 (size AA) batteries (2)
- HDMI cord (1) (supplied with DVP-NS710HP, DVP-NS718HP, and DVP-NS728HP only)

Specifications and design are subject to change without notice.

ENERGY STAR® is a U.S. registered mark. As an ENERGY STAR® Partner, Sony Corporation has determined that this product meets the ENERGY STAR® guidelines for energy efficiency.

SECTION 2
DISASSEMBLY

Note: Follow the disassembly procedure in the numerical order given.

2-1. UPPER CASE

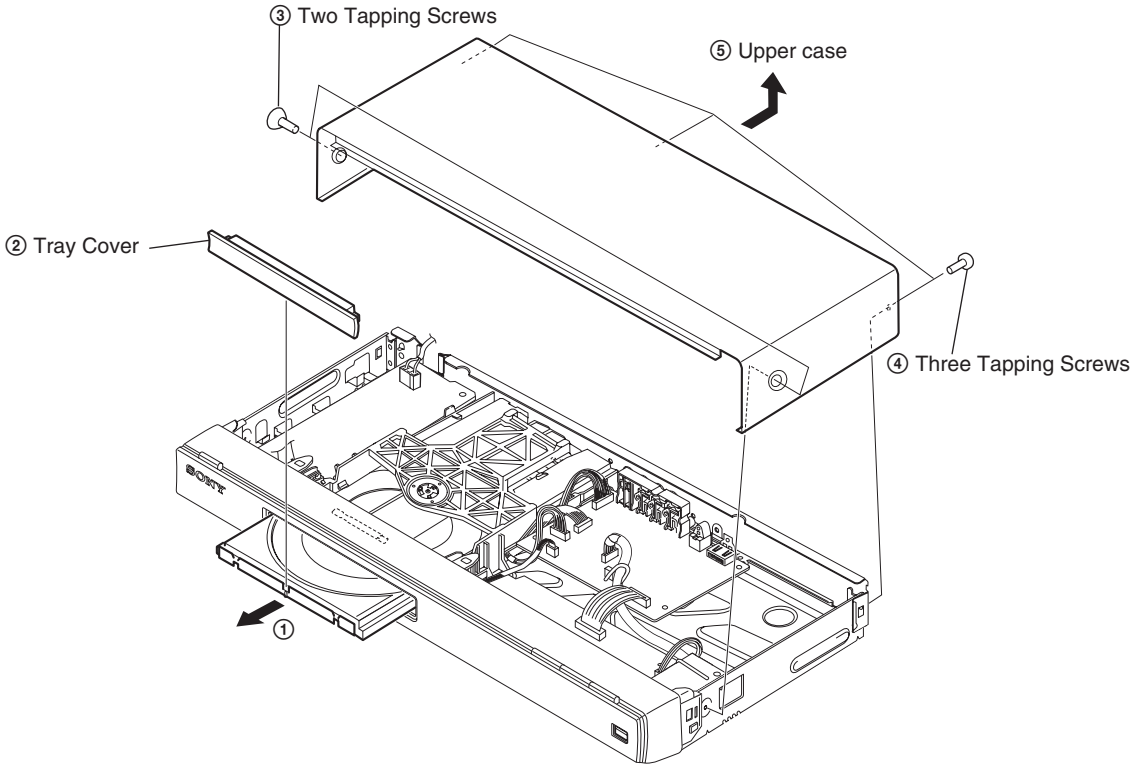

2-2. FRONT PANEL ASSEMBLY

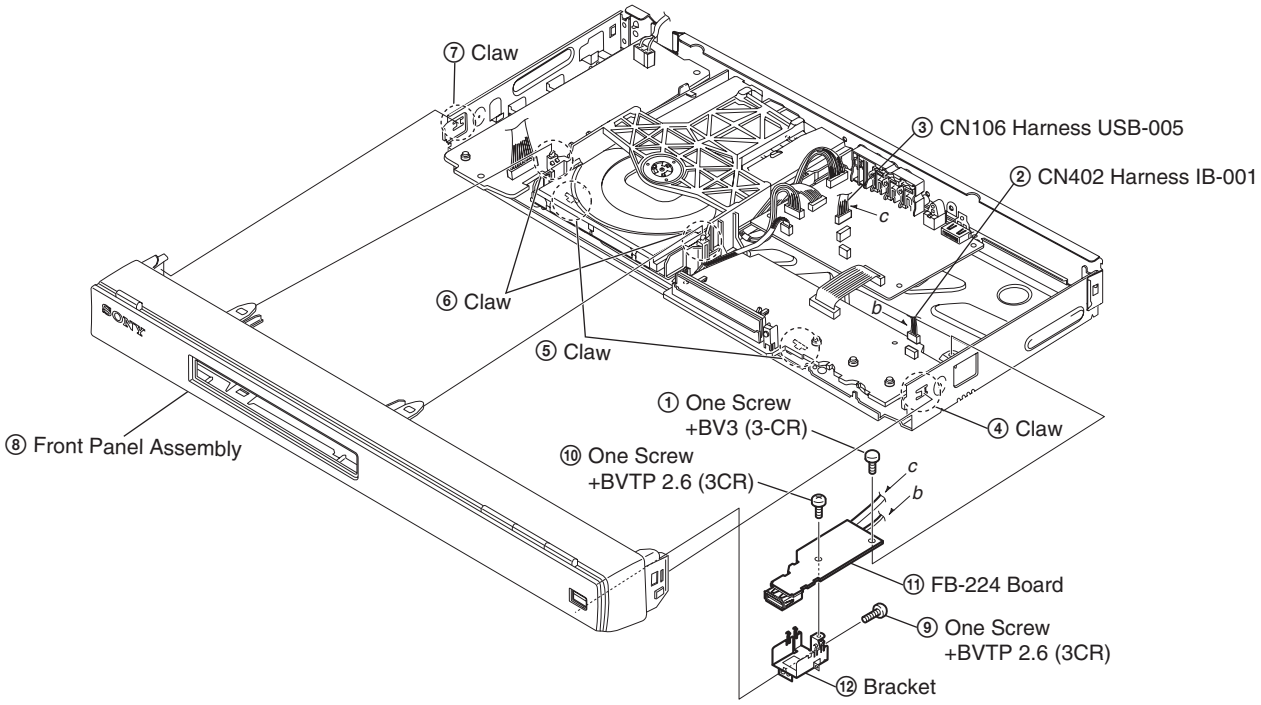

2-3. LOADING ASSEMBLY

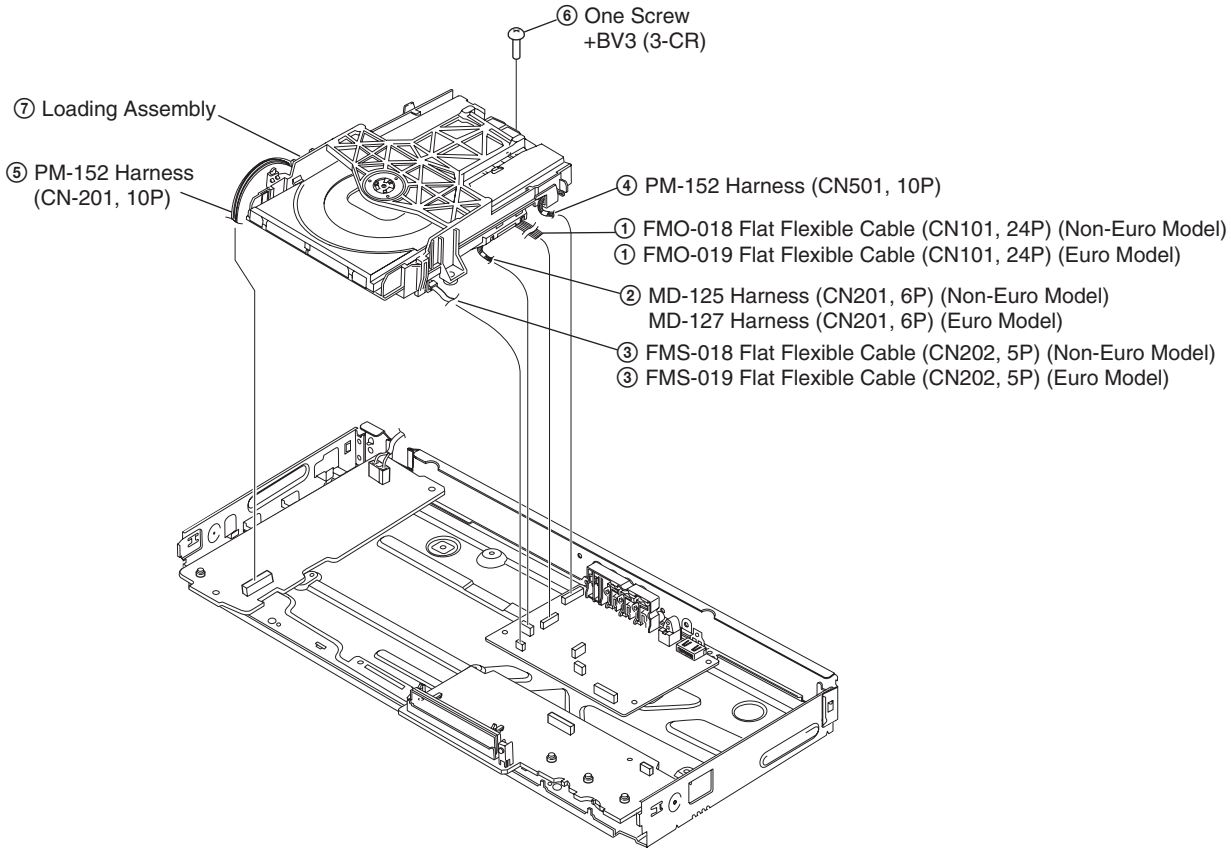

2-4. OPTICAL PICK UP AND BU HOLDER ASSEMBLY (DEVICE, OPTICAL KHM-313CAA/C2RP)

Note:
Solder shortland before remove the FMO-018 (Non Euro Model)/ FMO-019 (Euro Model) Flat Flexible Cable from 24 pin BU connector.

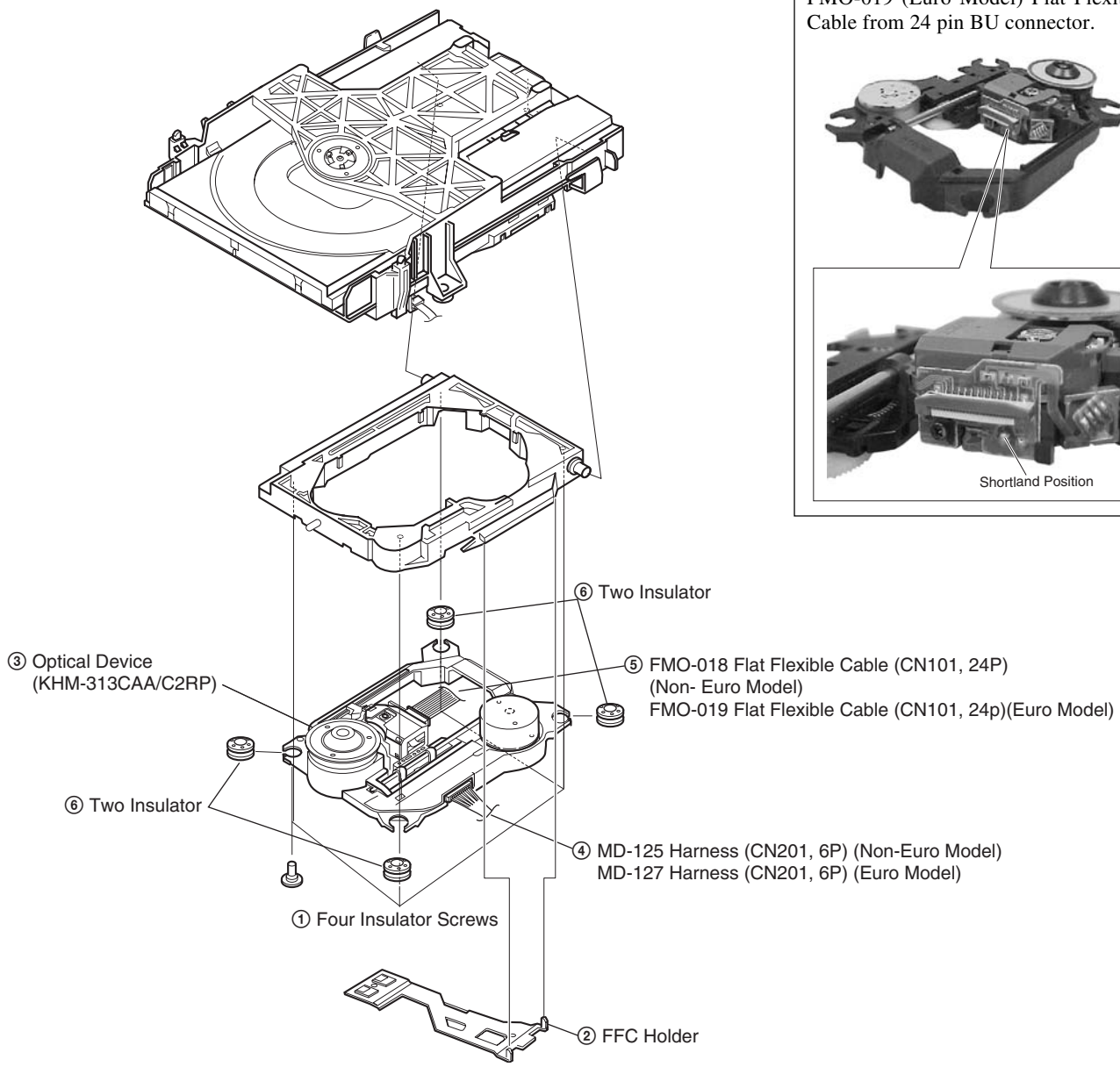

Caution Point on the Laser Diode:
Laser Diode in the optical Device is very sensitive to Surge Current or ElectroStatic Discharge (ESD):

After take-out FMO-018 (Non Euro Model)/FMO-019 (Euro Model) Flat Flexible Cable from CN101 of MV-60 (Non Euro Model)/MV-62(Euro Model) board immediately ground FMO-018/FMO-019 Flat Flexible Cable pattern using short clip. Metal paper clip can be used as short clip.

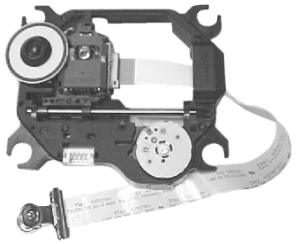

2-5. REAR PANEL, MV BOARD and IF BOARD

2-5-1. REAR PANEL, MV-60 BOARD, IF-163 BOARD

Non Euro Model
(DVP-NS611HP/NS710H/NS710HP/NS717HP/NS718HP/NS728HP)
NS718H:CND,AUS
NS728H:AUS

Note:

Caution Point on the PWB IF-163

When handling IF-163 PWB avoid contact with the sharp metal edge on the top side of Vacuum Fluorescent Display (ND402).

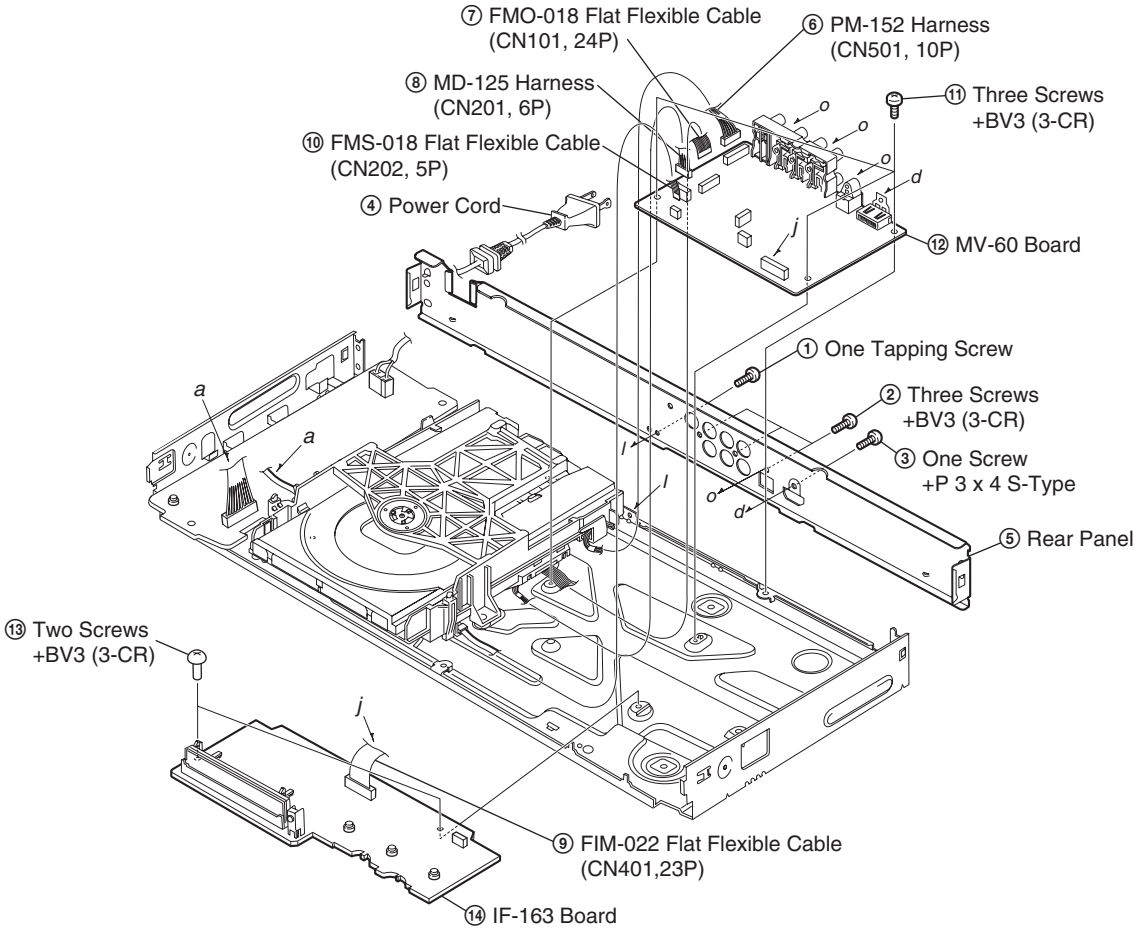

2-5-2. REAR PANEL, MV-62 BOARD, IF-163 BOARD
Euro Model
(DVP-NS718H:AEP,UK,RUS/NS728H:AEP,UK,RUS)

Note:

Caution Point on the PWB IF-163

When handling IF-163 PWB avoid contact with the sharp metal edge on the top side of Vacuum Fluorescent Display (ND402).

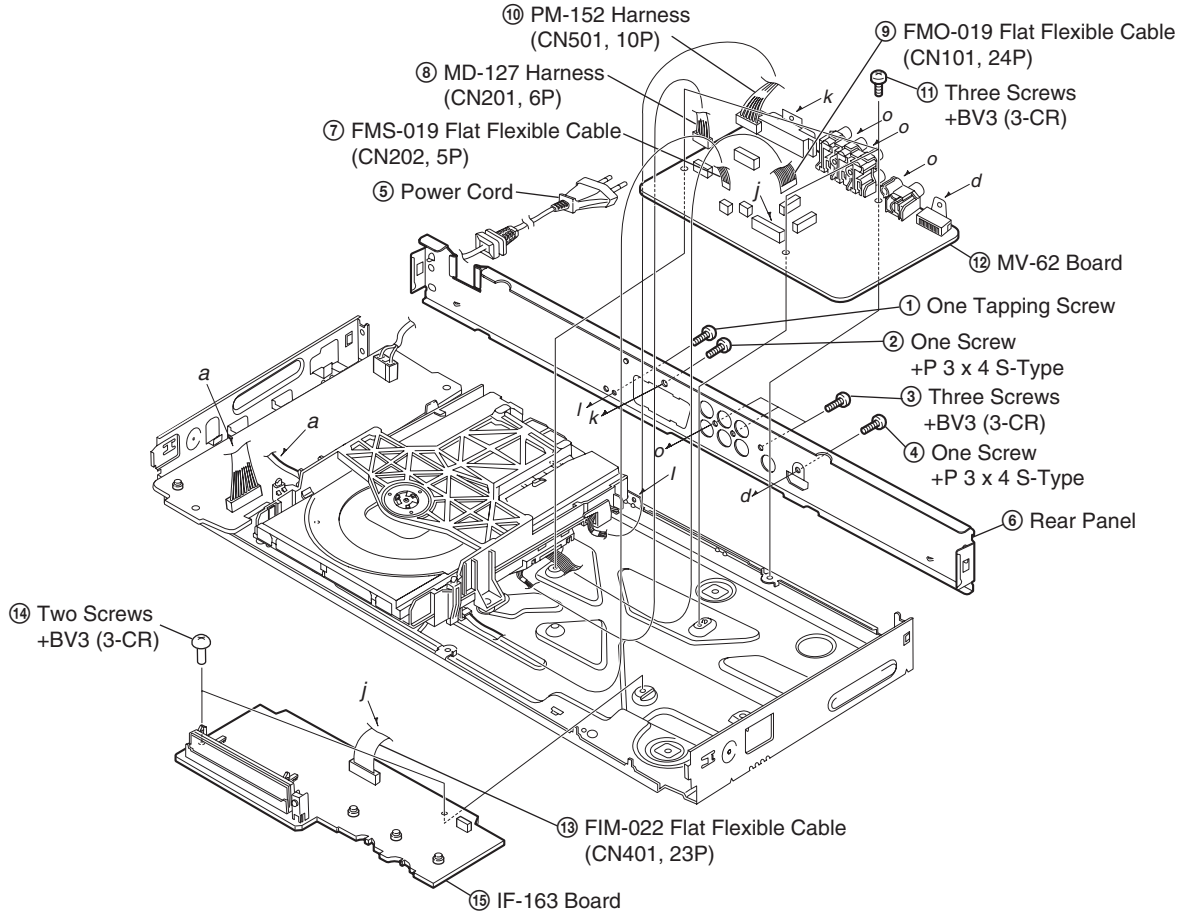

2-6. SWITCHING REGULATOR

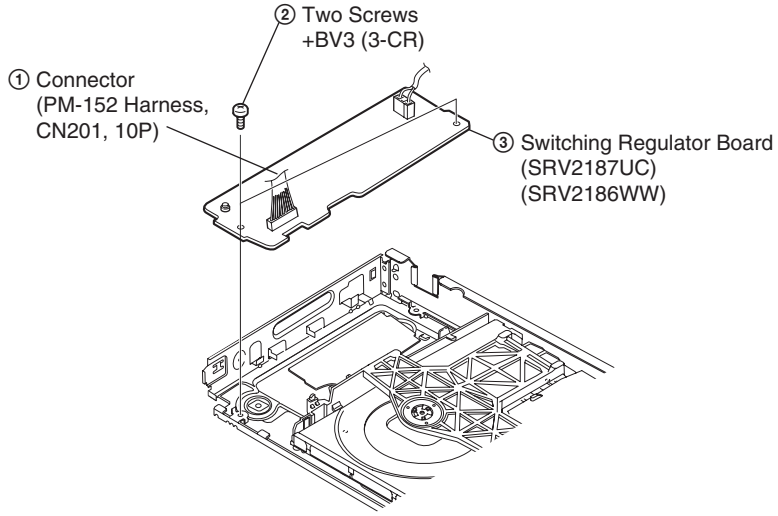

2-7. INTERNAL VIEWS

TOP VIEW

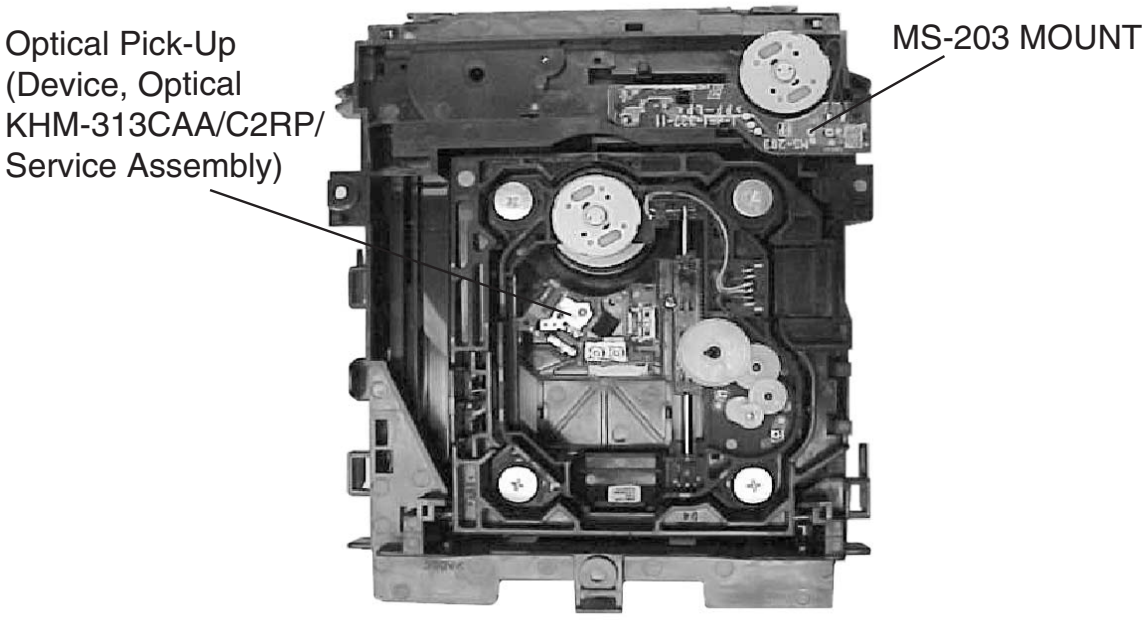

BOTTOM VIEW

2-8. CIRCUIT BOARDS LOCATION

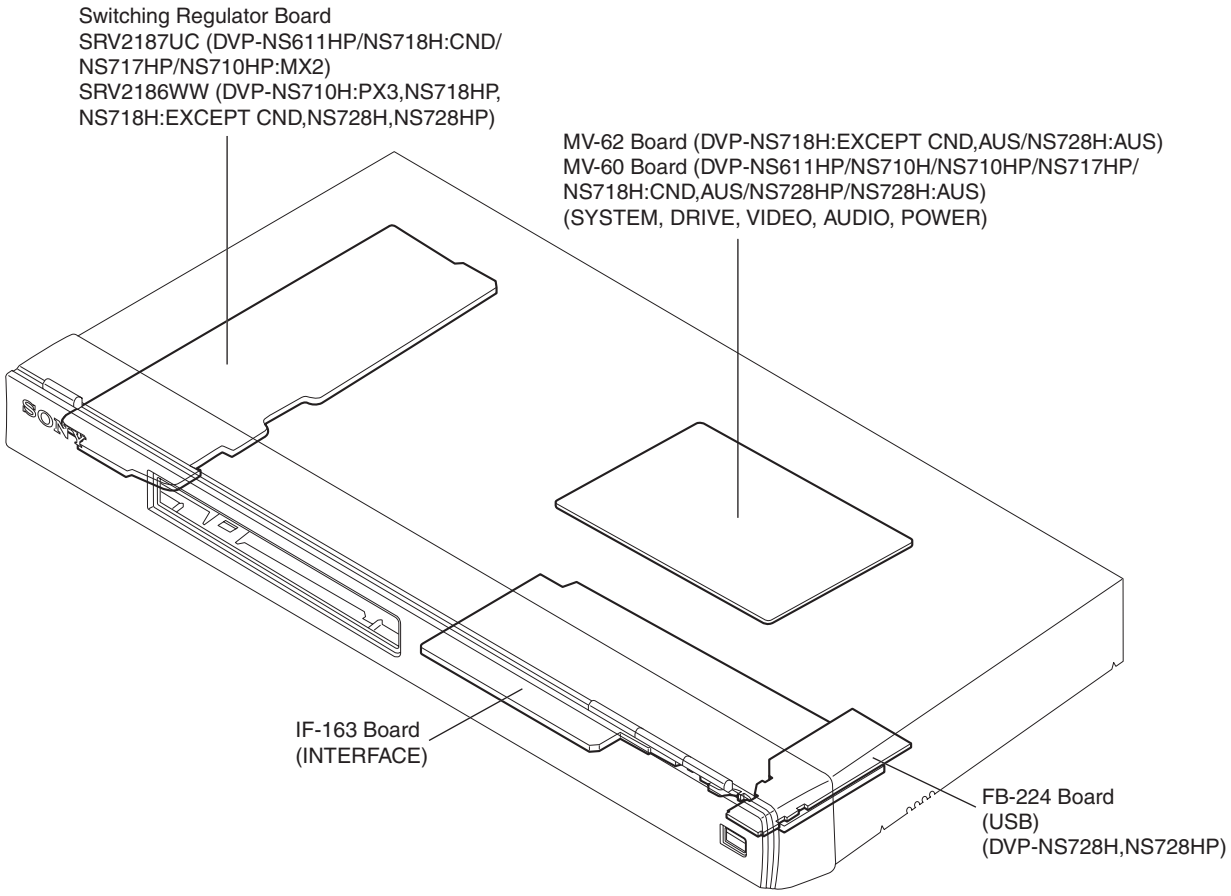

SECTION 3
BLOCK DIAGRAMS

3-1. OVERALL BLOCK DIAGRAM

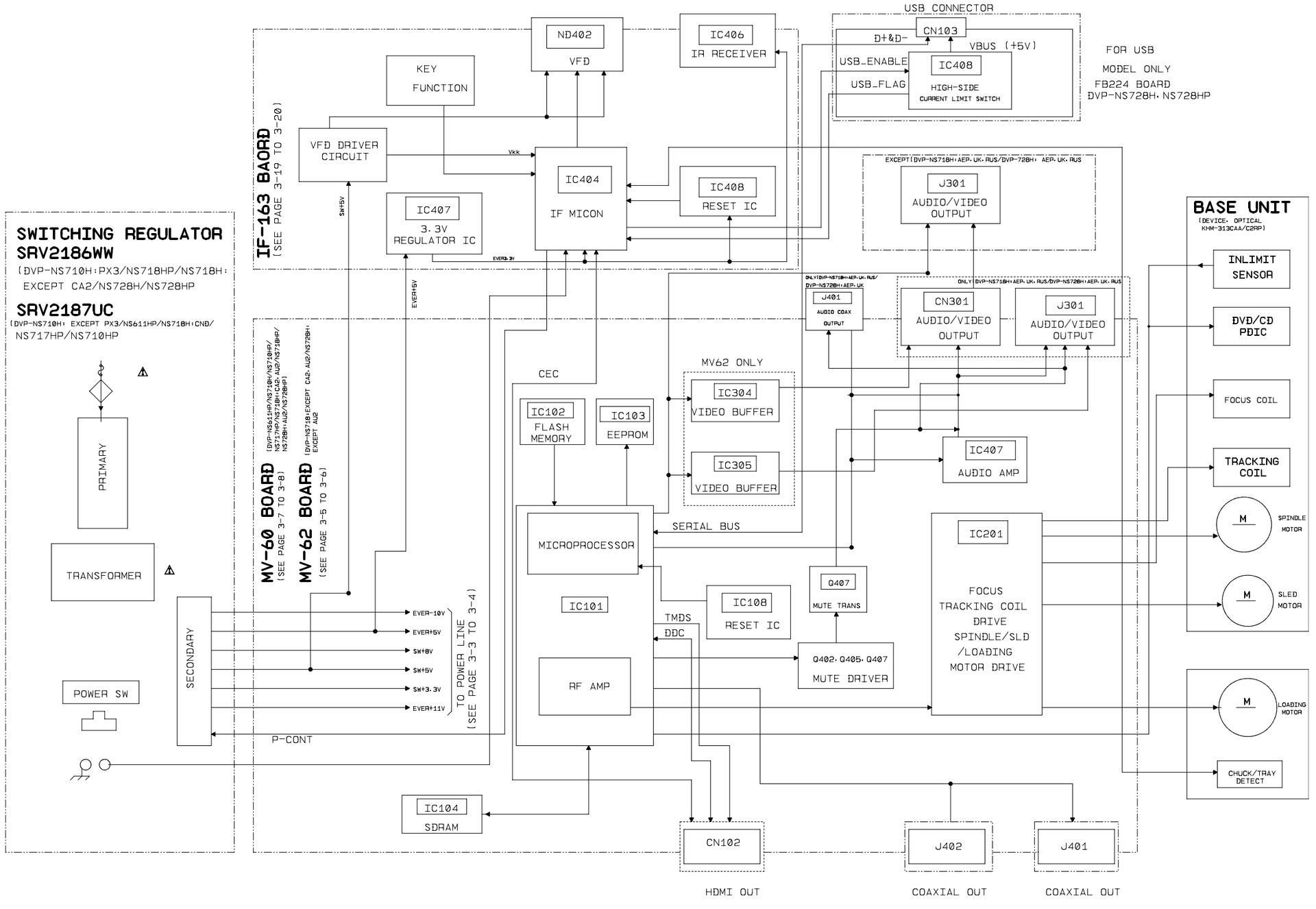

- Abbreviation
  - AR : Argentina Model
  - AUS : Australia/NZ Model
  - BR : Brazilian Model
  - CND : Canadian Model
  - E : Latin America Model
  - EA : Middle East Model
  - IN : India Model
  - IR : Iran Model
  - KR : Korea Model
  - ME2 : Middle East Model
  - ME5 : Pak, Mor Model
  - MX : Mexican Model
  - MY : Malaysian Model
  - PX : PX Model
  - KS : Saudi Arabia Model
  - SP : Singapore Model
  - TH : Thailand Model
  - TW : Taiwan Model
  - US : USA Model
  - VN : Vietnam Model

Notes:
MV-60/62 Board must be replaced if
IC103 (EEPROM IC) is damaged or not functioning.

The old MV-60/62 Board must be completely disposed.

The components identified by mark ⚠ or dotted line with mark ⚠ are critical for safety.
Replace only with part number specified.

3-2. POWER LINE BLOCK DIAGRAM

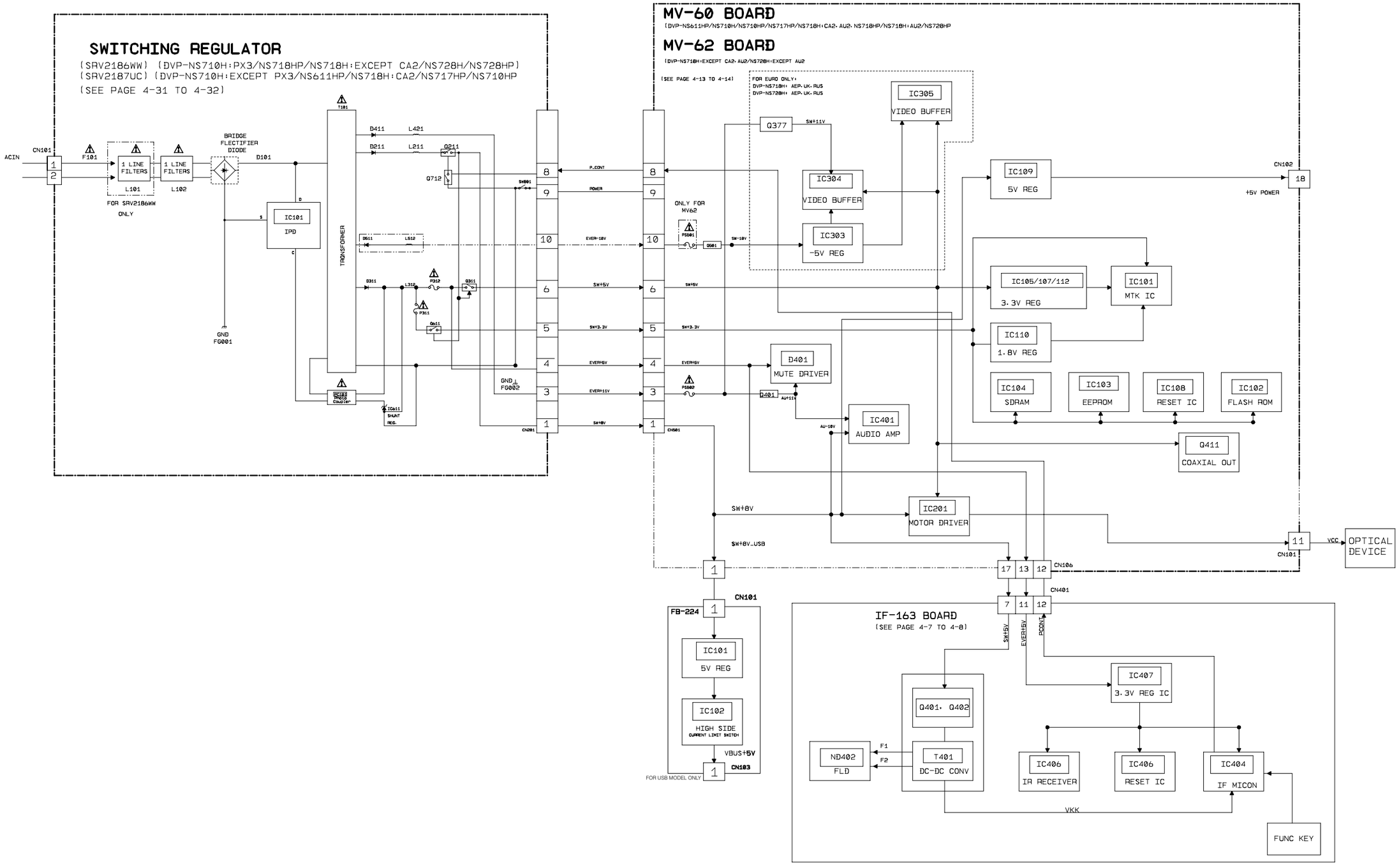

The components identified by mark ⚠ or dotted line with mark ⚠ are critical for safety. Replace only with part number specified.

3-3. SYSTEM CONTROL/SIGNAL PROCESSOR BLOCK DIAGRAM

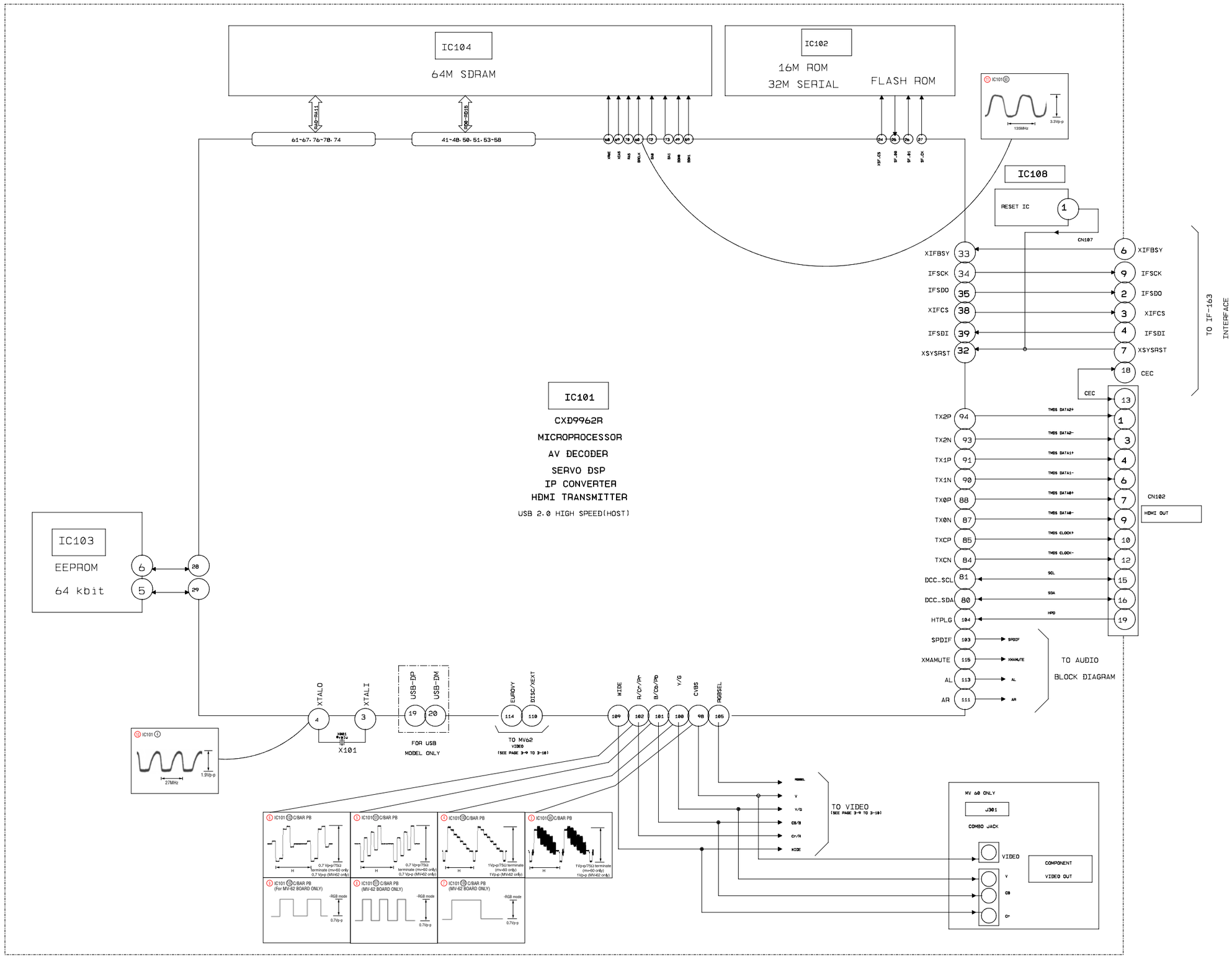

3-4. RF/SERVO BLOCK DIAGRAM

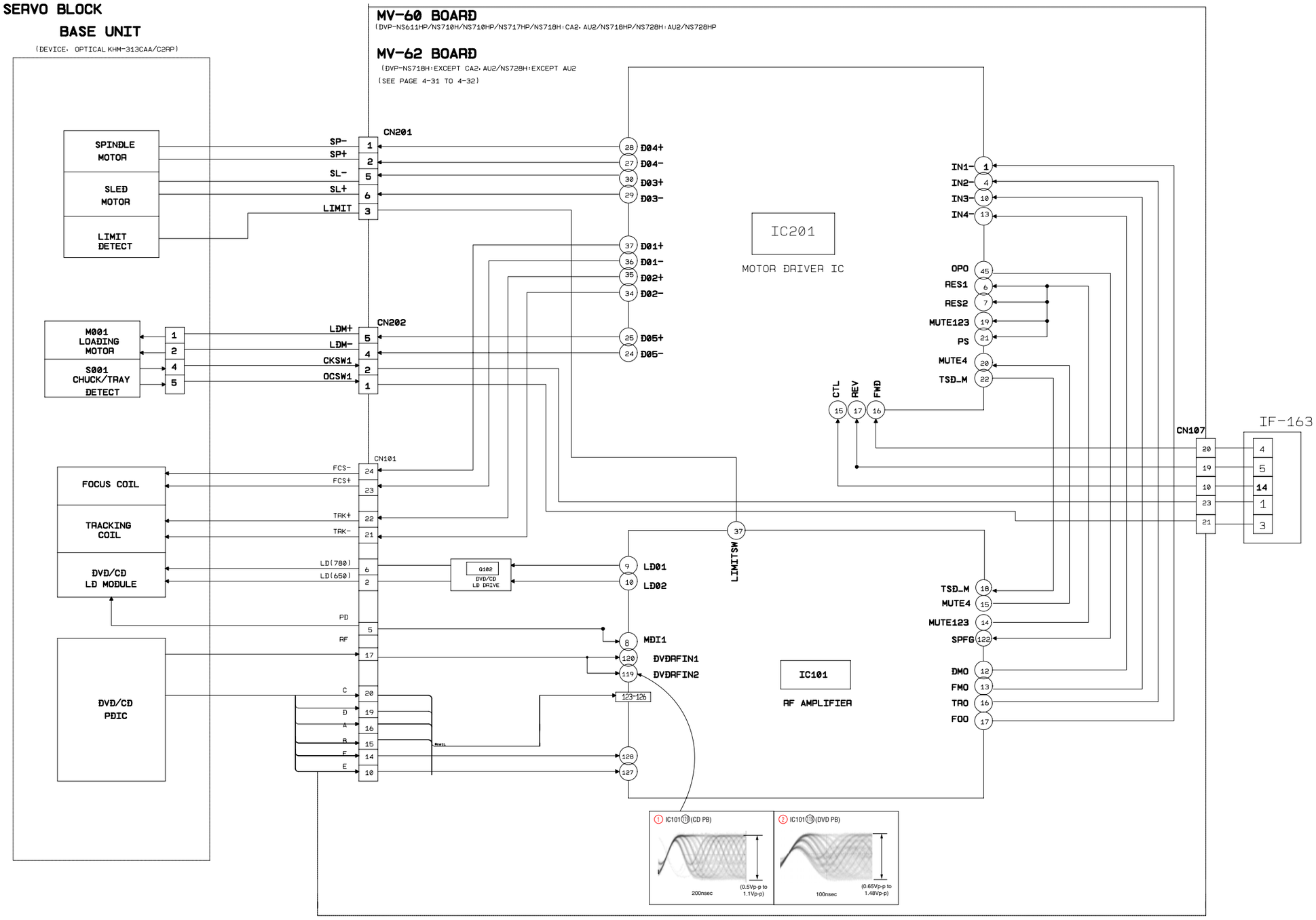

3-5. VIDEO BLOCK DIAGRAM

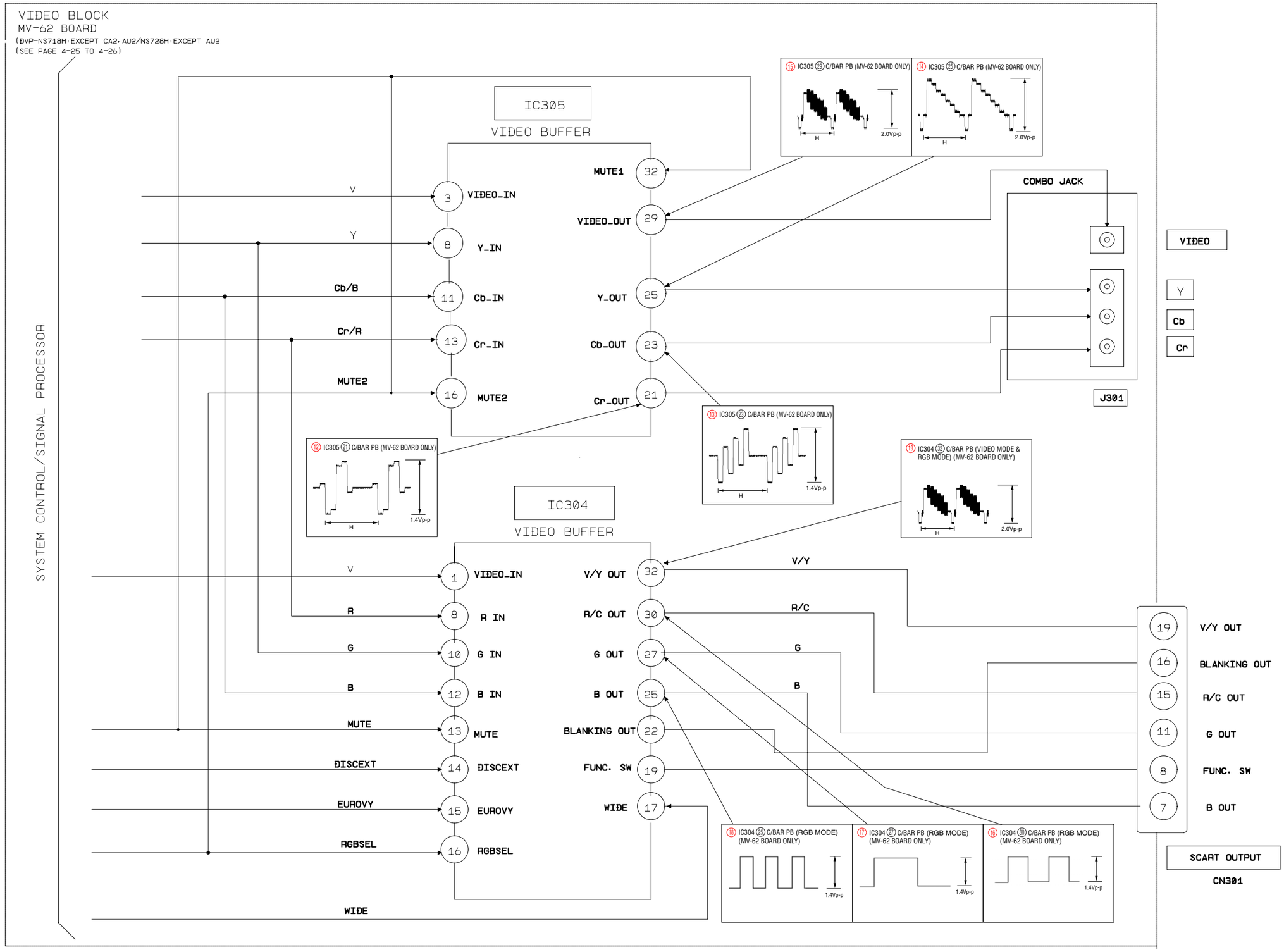

3-6. AUDIO BLOCK DIAGRAM

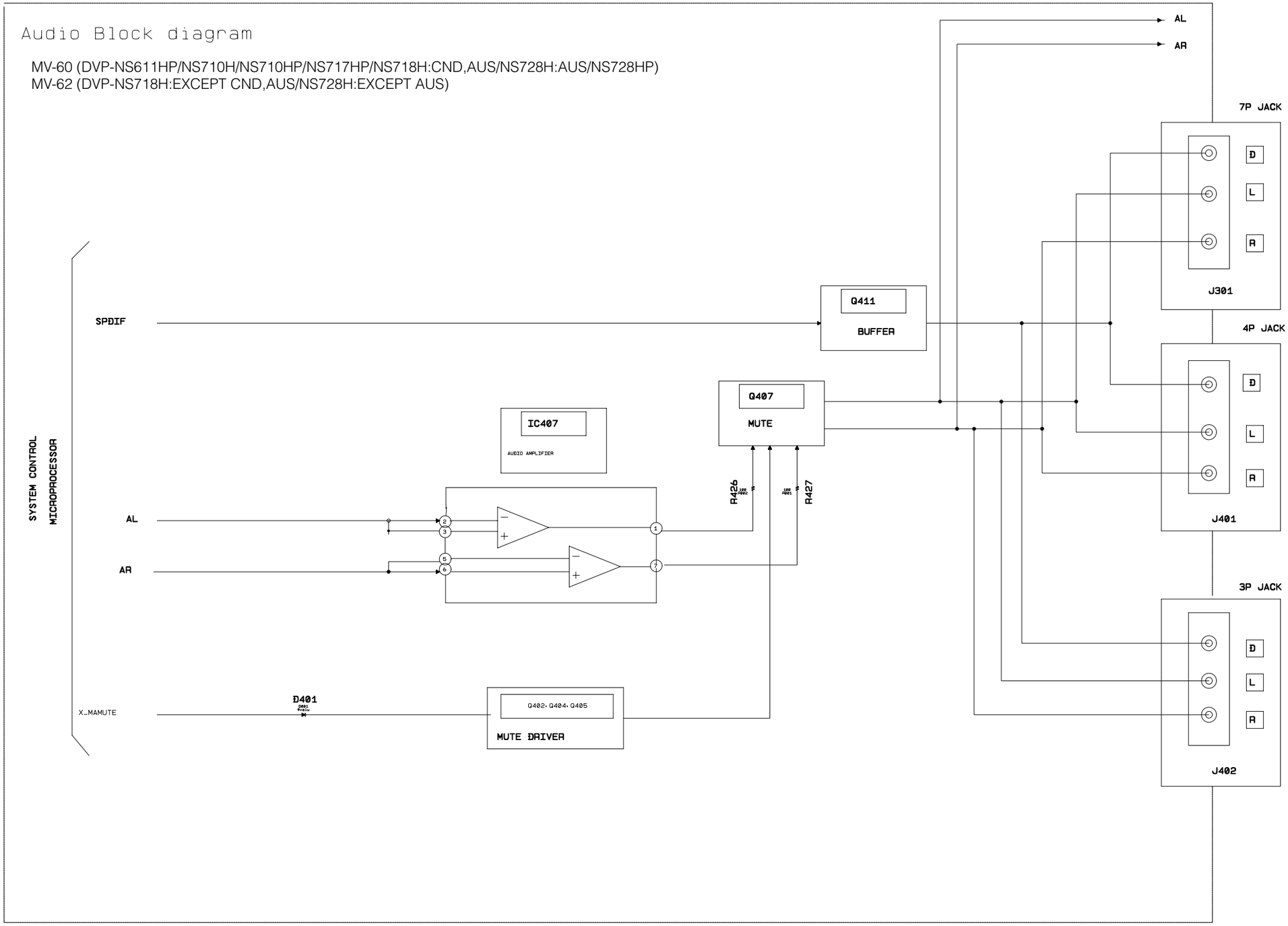

3-7. INTERFACE CONTROL BLOCK DIAGRAM

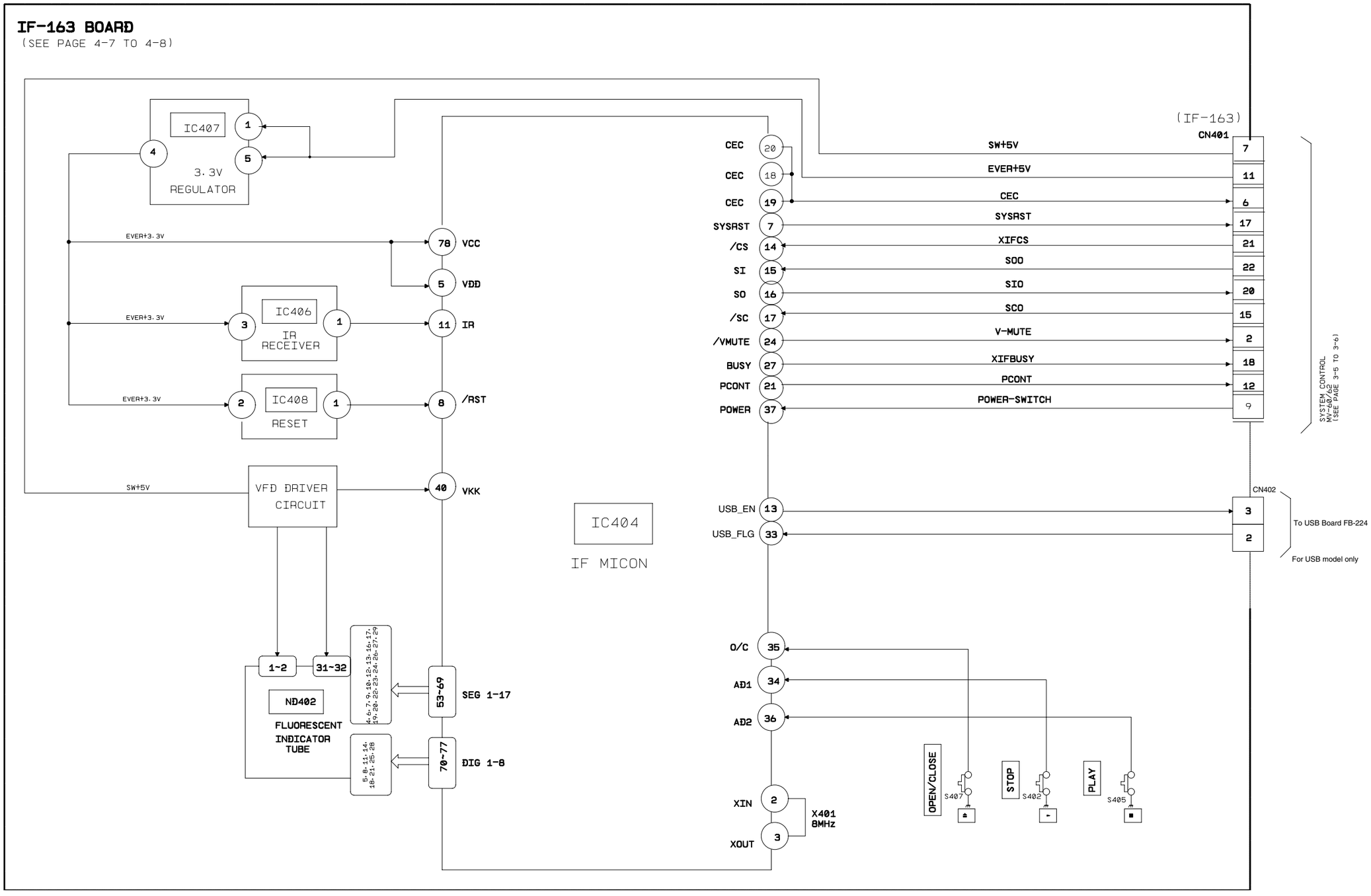

SECTION 4
PRINTED WIRING BOARDS AND SCHEMATIC DIAGRAMS

4-1. FRAME SCHEMATIC DIAGRAM

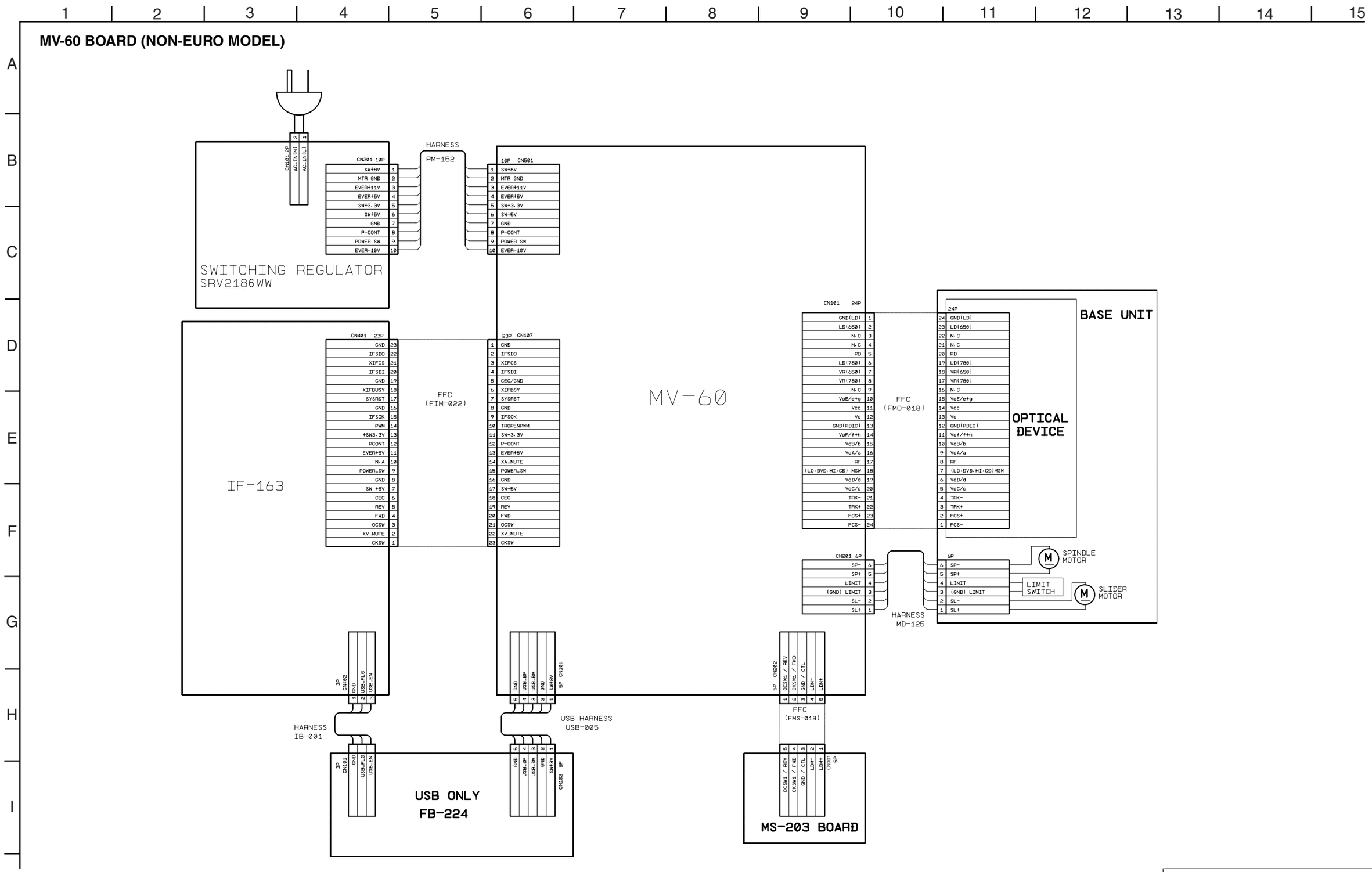

MV-62 BOARD (EURO MODEL)

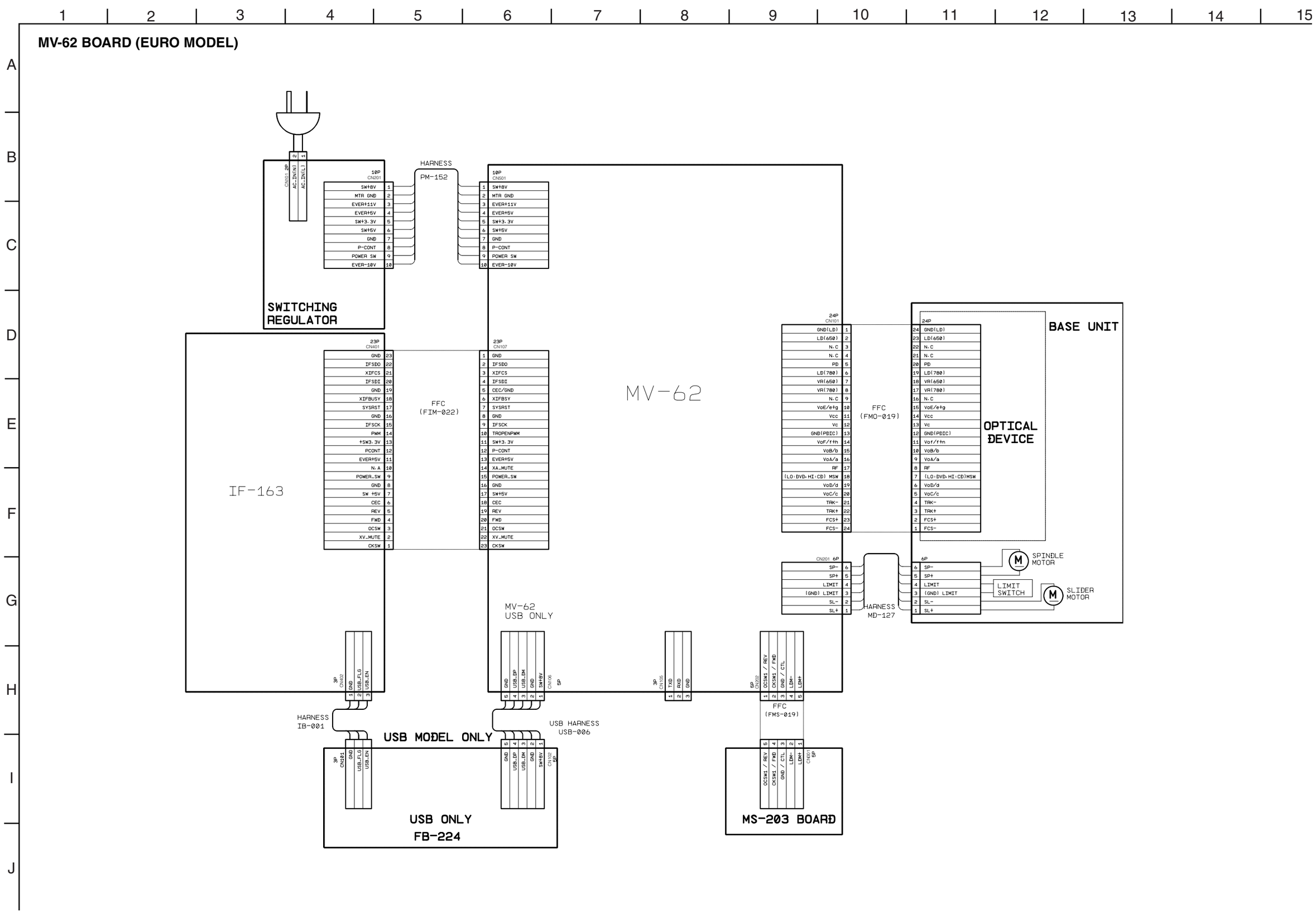

FRAME SCHEMATIC DIAGRAM

4-2. PRINTED WIRING BOARDS AND SCHEMATIC DIAGRAMS

THIS NOTE IS COMMON FOR WIRING BOARDS AND SCHEMATIC DIAGRAMS.
(In addition to this, the necessary note is printed in each block)

For printed wiring boards:

- ○—— : indicates a lead wire mounted on the component side.
- ●—— : indicates a lead wire mounted on the printed side.
- a : Through hole.
- ▭ : Pattern from the side which enables seeing.
  (The other layers' patterns are not indicated.)

Caution:
Pattern face side: (Side A) Parts on the pattern face side seen from the pattern face are indicated.
Parts face side: (Side B) Parts on the parts face side seen from the parts face are indicated.

- Abbreviation

AEP : AEP Model
AR : Argentina Model
AUS : Australia New Zealand Model
BR : Brazilian Model
CND : Canadian Model
E : Latin America Model
EA : Middle East Model
IN : India Model
IR : Iran Model
KS : Saudi Arabia Model
KR : Korea Model
MX : Mexican Model
PX : PX Model
RUS : Russian Model
SP : Singapore Model
TH : Thailand Model
TW : Taiwan Model
US : USA Model
UK : UK Model

For schematic diagrams:

- All capacitors are in µF unless otherwise noted. pF : µµF.
  50V or less are not indicated except for electrolytics and tantalums.
- All resistors are in ohms, 1/4W (Chip resistors : 1/10W)
  un-less otherwise specified.
  kΩ = 1000 Ω, MΩ = 1000k Ω.
- Caution when replacing chip parts.
  New parts must be attached after removal of chip.
  Be careful not to heat the minus side of tantalum capacitor,
  because it is damaged by the heat.
- All variable and adjustable resistors have characteristic curve B,
  unless otherwise noted.
- ▭ : non flammable resistor.
- ▭ : fusible resistor.
- ▭ : panel designation.
- f : internal component.
- ▭ : adjustment for repair.
- Circled numbers refer to waveforms.
- Voltages are dc between measurement point.
- Readings are taken with a color-bar signal on DVD reference disc and when playing CD reference disc.
- Readings are taken with a digital multimeter (DC 10M Ω).
- Voltage variations may be noted due to normal production tolerances.

Note:
The components identified by mark ⚠ or dotted line with mark ⚠ are critical for safety.
Replace only with part number specified.

When indicating parts by reference number, please include the board name.

WAVEFORMS

MV-60 BOARD (NON EURO MODEL)
MV-62 BOARD (EURO MODEL)

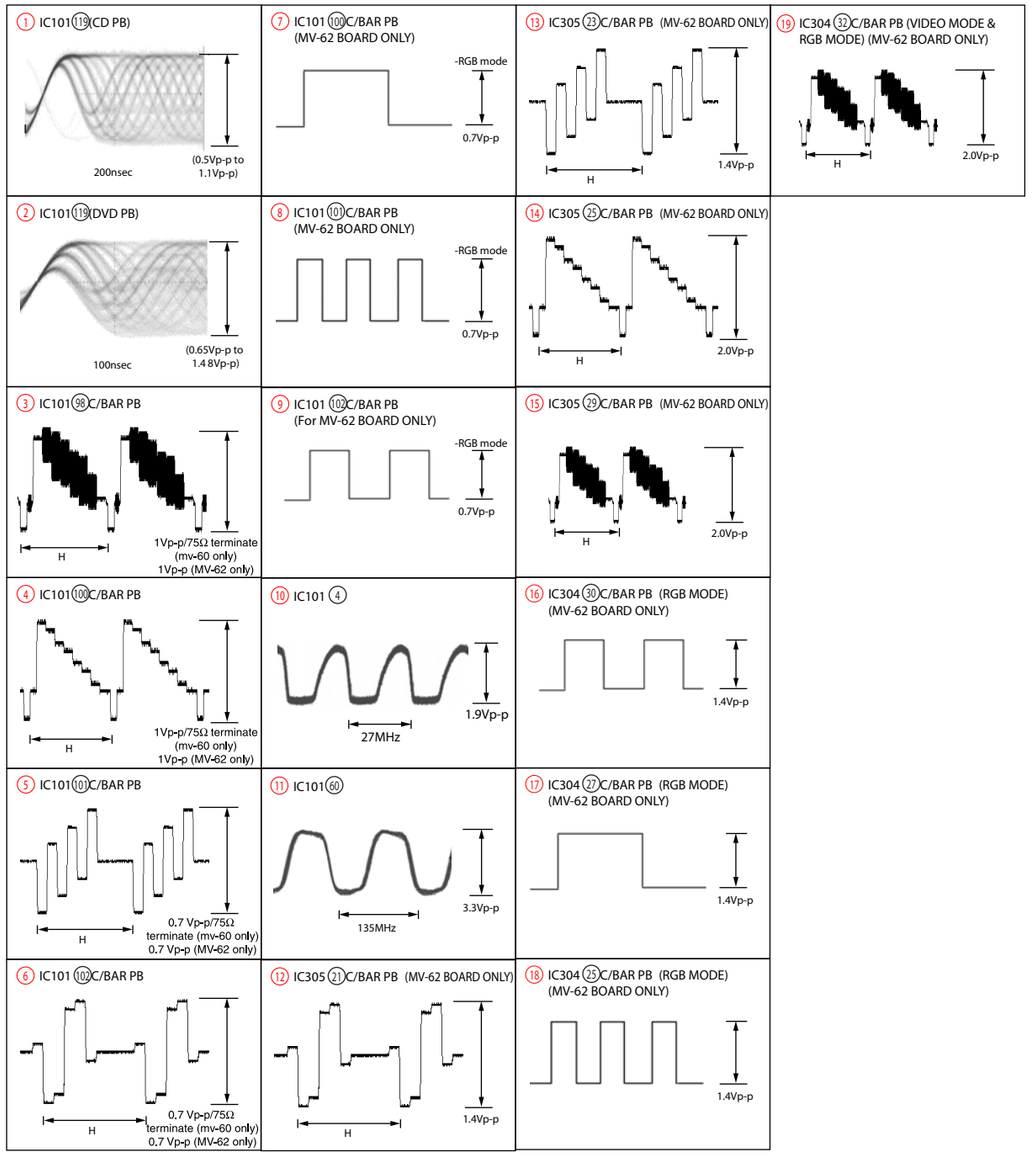

IF-163 (INTERFACE) PRINTED WIRING BOARD

• : Uses unleaded solder.

IF-163 BOARD (SIDE A)

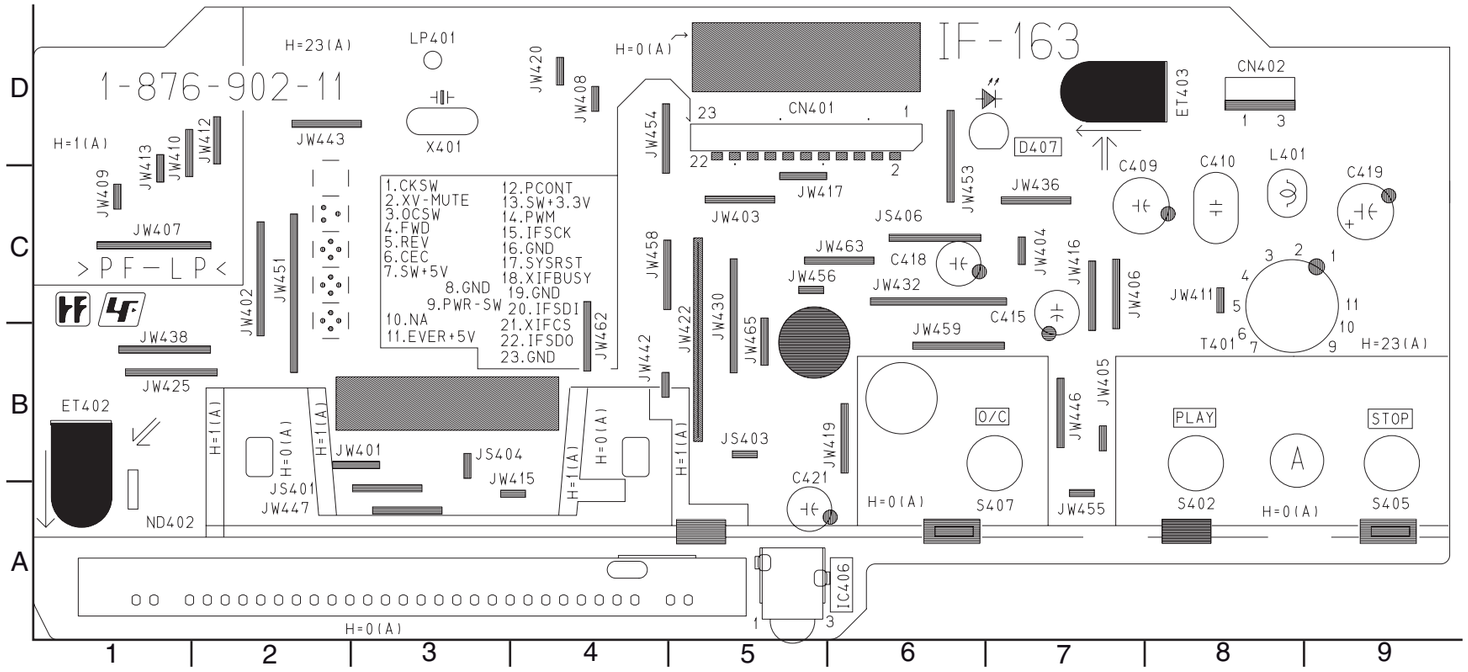

IF-163 BOARD (SIDE B)

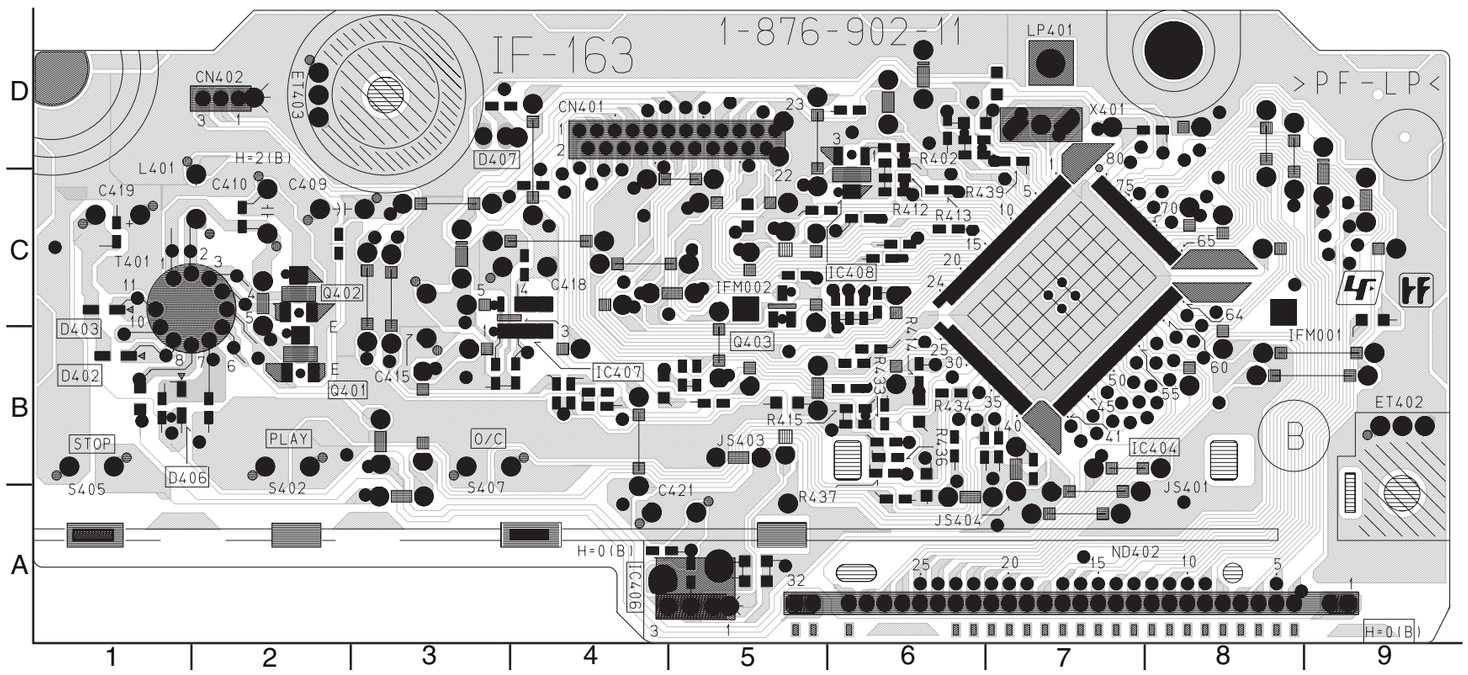

For printed wiring board

There are a few cases that the part printed on this diagram isn't mounted in this model.

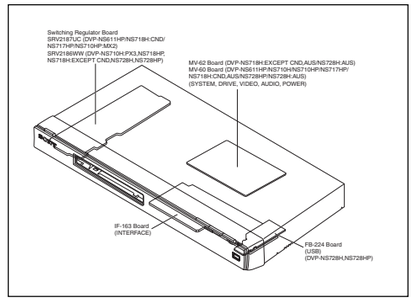

IF-163 BOARD

SIDE A

IC406 A-4

D407 D-7

SIDE B

IC404 B-7
IC406 A-4
IC407 B-4
IC408 C-5

Q401 B-3
Q402 C-3
Q403 B-5

D402 B-1
D403 C-1
D406 B-2
D407 C-3

For Schematic Diagram

• Refer to page 4-7 to 4-8 for printed wiring board of IF-163 board.

IF-163 BOARD
INTERFACE
-REF.NO.:1000 SERIES-
XX MARK:NO MOUNT

NO MARK:PB MODE
MARKED:MOUNT TABLE

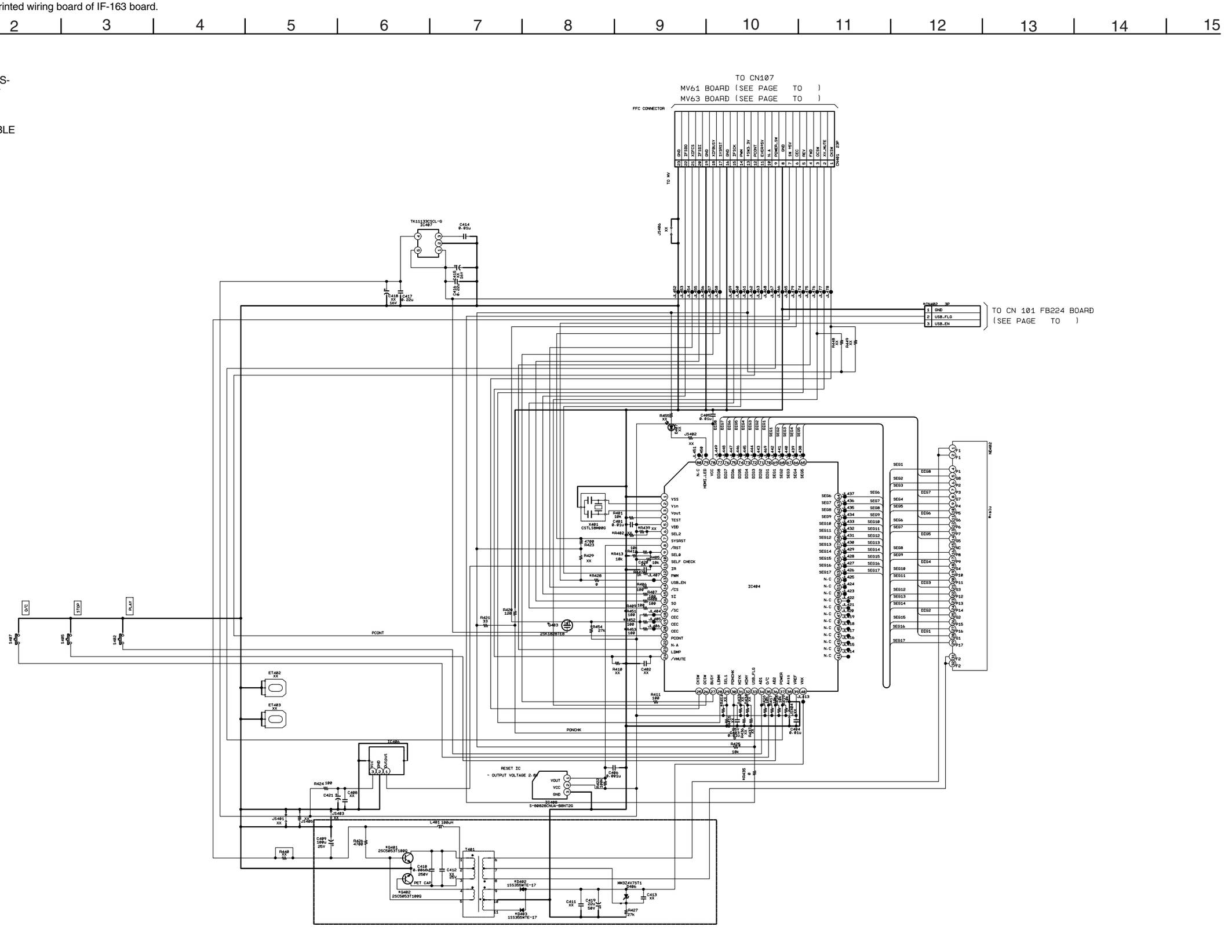

FB-224 (USB) PRINTED WIRING BOARD

FB-224 BOARD (SIDE A)

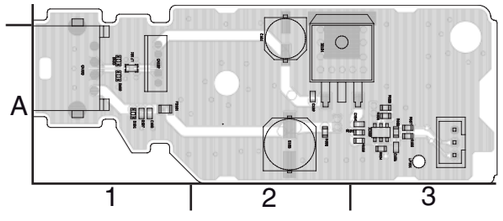

FB-224 BOARD (SIDE B)

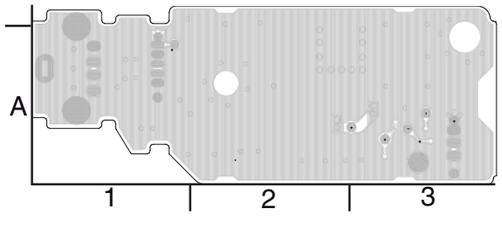

For Schematic Diagram

• Refer to page 4-11 to 4-12 for printed wiring board of FB-224 board.

• : Uses unleaded solder.

FB-224 BOARD

SIDE A

IC101	A-2
IC102	A-3
D101	A-1
D102	A-1
D103	A-1

For printed wiring board

There are a few cases that the part printed on this diagram isn't mounted in this model.

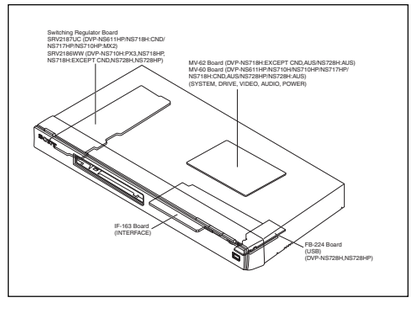

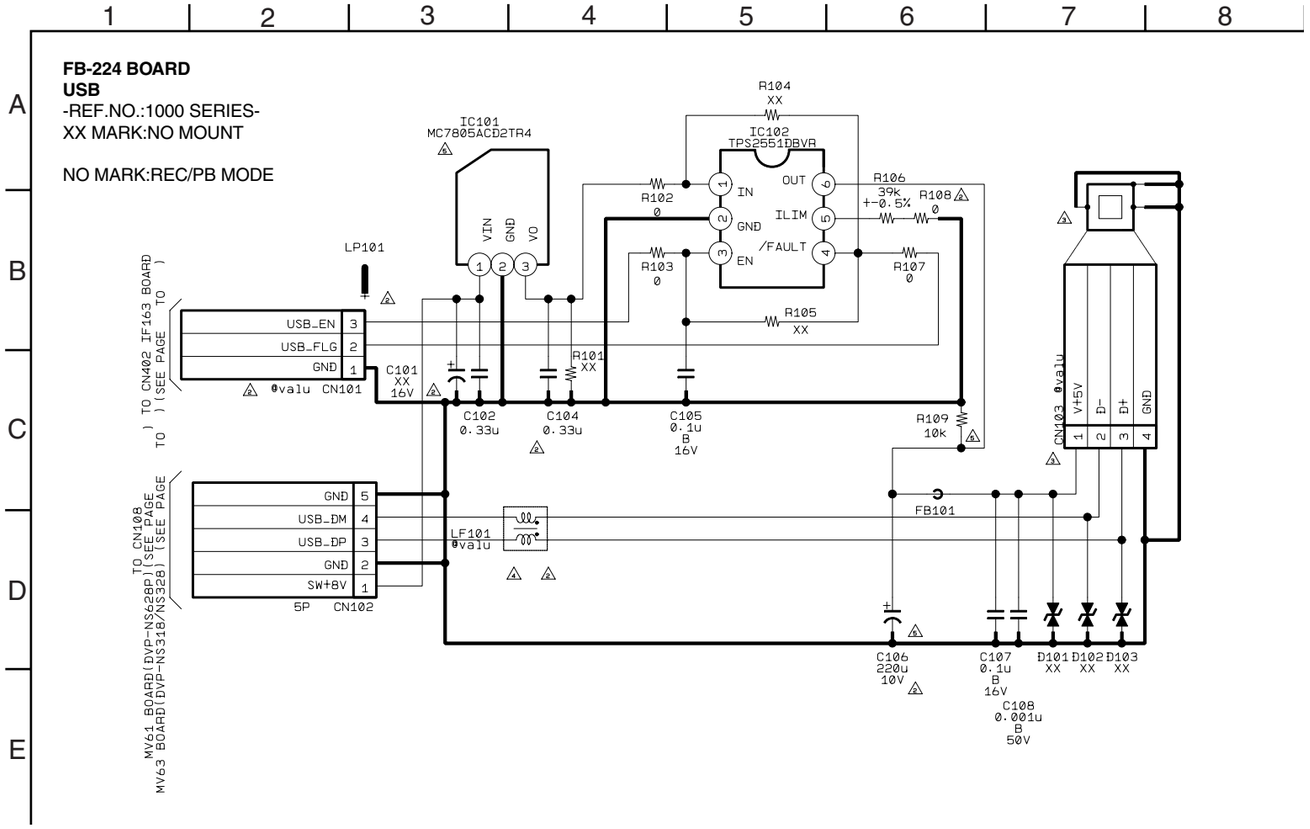

USB
FB-224

MS-203 (LOADING MOTOR) PRINTED WIRING BOARD

MS-203 BOARD

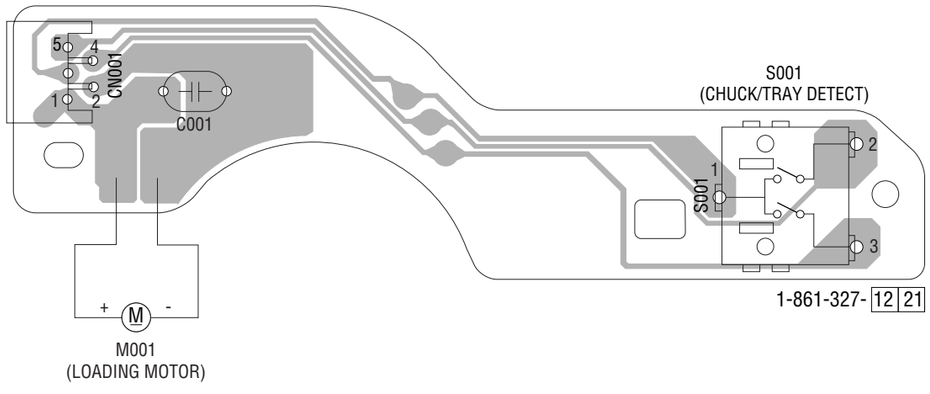

• : Uses unleaded solder.

For printed wiring board

There are a few cases that the part printed on this diagram isn't mounted in this model.

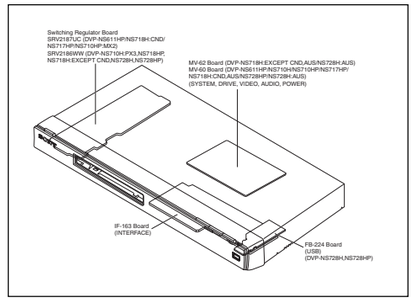

For Schematic Diagram

• Refer to page 4-9 for printed wiring board of MS-203 board.

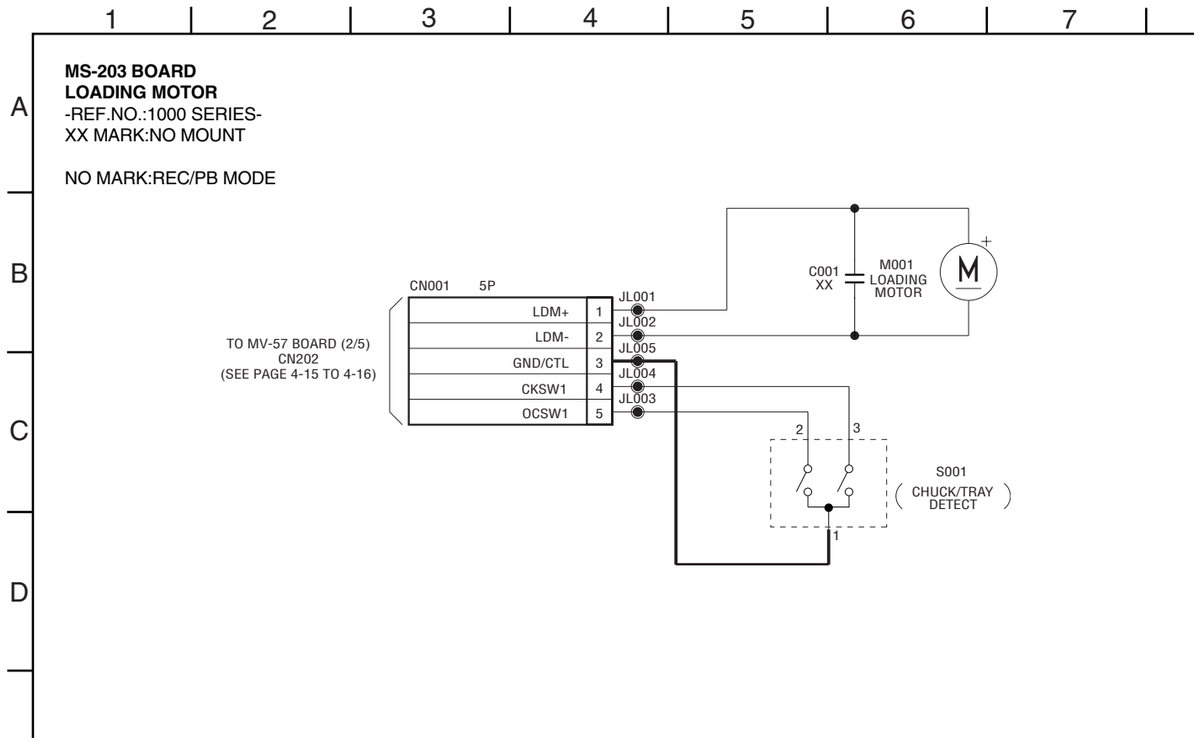

MV-60 (SYSTEM, SERVO, VIDEO, AUDIO) PRINTED WIRING BOARD
Non Euro Model
(DVP-NS611HP/NS710H/NS710HP/NS717HP/NS718HP/NS728HP)
NS718H:CND,AUS
NS728H:AUS

• LF : Uses unleaded solder.

MV-60 BOARD (SIDE A)

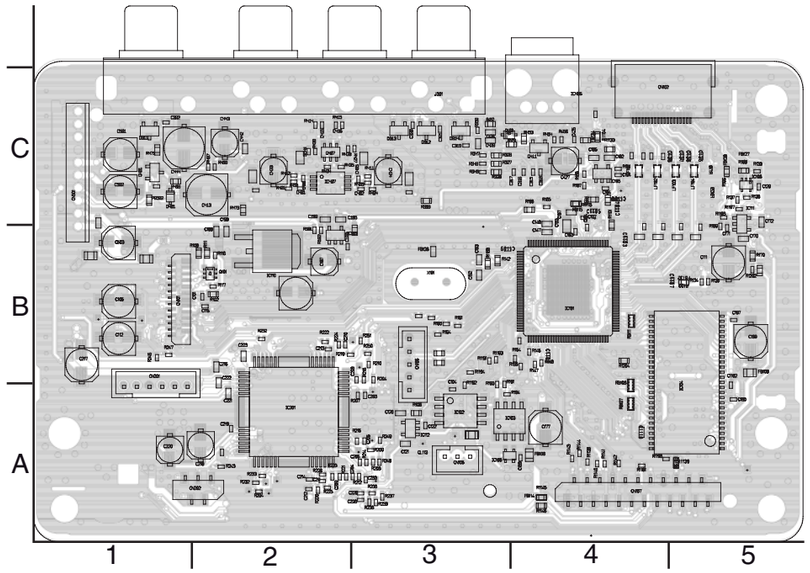

MV-60 BOARD (SIDE B)

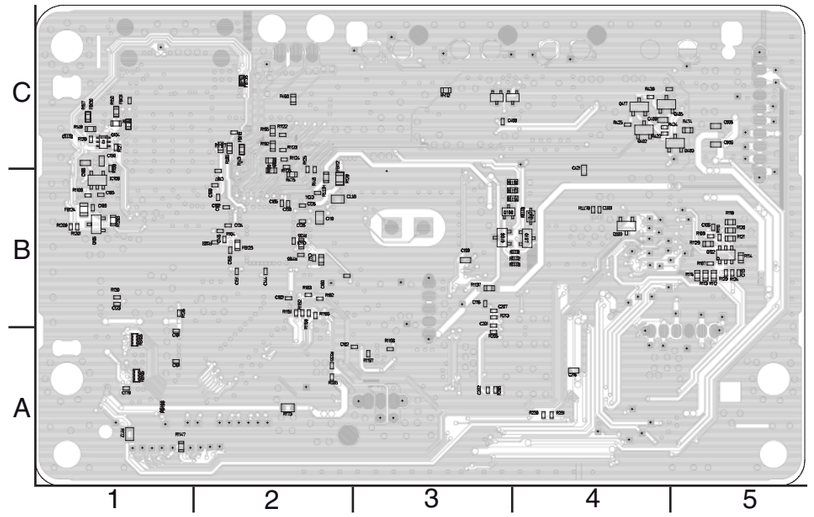

For printed wiring board

There are a few cases that the part printed on this diagram isn't mounted in this model.

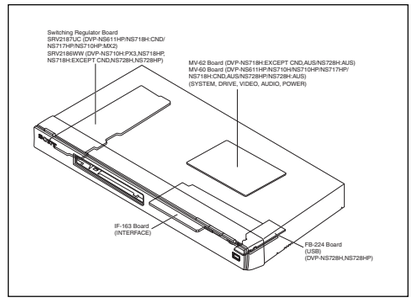

MV-55 BOARD

SIDE A

IC102 A-3
IC103 A-3
IC104 A-5
IC105 C-4
IC105 C-4
IC106 C-5
IC107 B-2
IC107 C-3
IC108 A-4
IC110 B-2
IC111 C-5
IC112 A-3
IC112 A-3
IC201 A-2
IC406 C-4
IC407 C-2

D311 C-1
D312 C-3
D313 C-3
D314 C-3
D401 C-1
D403 C-4

Q101 B-2
Q401 C-1
Q407 C-2
Q411 C-4
Q411 C-4

SIDE B

IC109 B-1

D101 B-4

Q102 B-5
Q103 B-4
Q104 C-1
Q105 C-1
Q106 B-3
Q107 B-3
Q108 B-3
Q402 C-4
Q403 C-5
Q405 C-5
Q417 C-4

MV-62 (SYSTEM, SERVO, VIDEO, AUDIO) PRINTED WIRING BOARD
Euro Model
(DVP-NS718H:AEP,UK,RUS/NS728H:AEP,UK,RUS)

MV-62 BOARD (SIDE A)

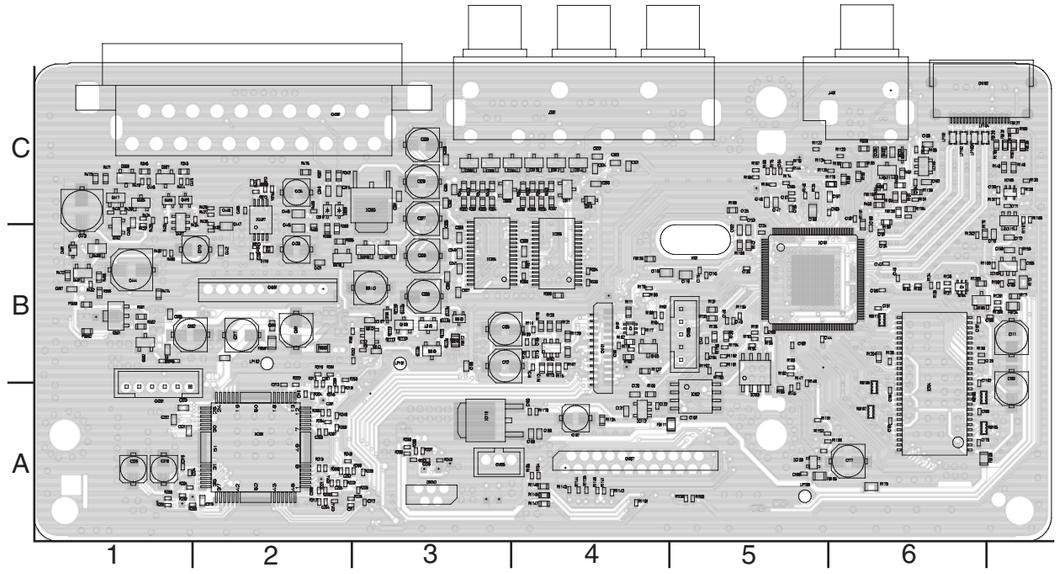

MV-62 BOARD (SIDE B)

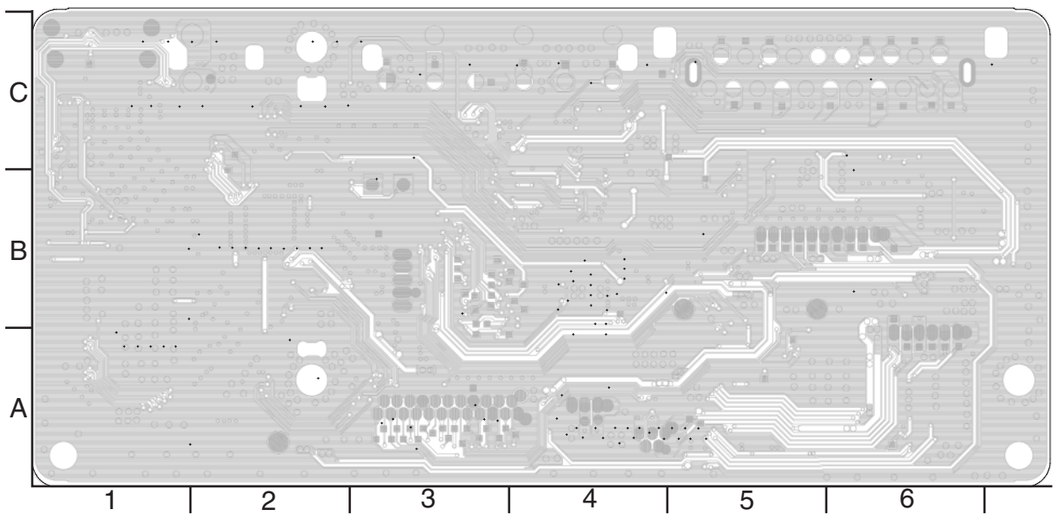

• : Uses unleaded solder.

For printed wiring board

There are a few cases that the part printed on this diagram isn't mounted in this model.

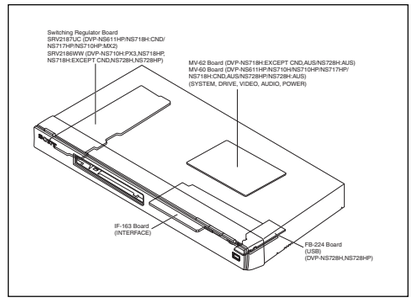

MV-56 BOARD

SIDE A

IC101 B-5
IC102 A-5
IC103 A-5
IC104 A-6
IC105 C-6
IC106 B-6
IC107 B-3
IC108 A-5
IC109 B-6
IC110 A-3
IC111 B-6
IC112 A-4
IC201 A-2
IC303 B-3
IC304 B-3
IC305 B-4

D101 B-3
D304 C-3
D305 C-3
D306 C-3
D309 B-2
D310 B-2
D312 C-4
D313 C-4
D314 C-4
D315 B-4
D401 B-1
D403 C-6
D911 C-4

Q101 B-4
Q102 B-4
Q103 B-4
Q104 B-6
Q105 B-6
Q106 B-3
Q107 B-3
Q108 B-3
Q109 B-3
Q375 B-3
Q376 B-3
Q377 B-3
Q401 B-1
Q403 B-1
Q411 C-6
Q501 B-1
Q502 B-1

For Schematic Diagram

• Refer to page 4-13 to 4-14 for printed wiring board of MV-60 boards.
• Refer to page 4-5 to 4-6 for waveforms

MV-60 BOARD
Non Euro Model
(DVP-NS611HP/NS710H/NS710HP/NS717HP/
NS718HP/NS728HP)
NS718H:CND,AUS
NS728H:AUS

SYSTEM/SERVO
-REF.NO.:1000 SERIES-
XX MARK:NO MOUNT

NO MARK:REC/PB MODE

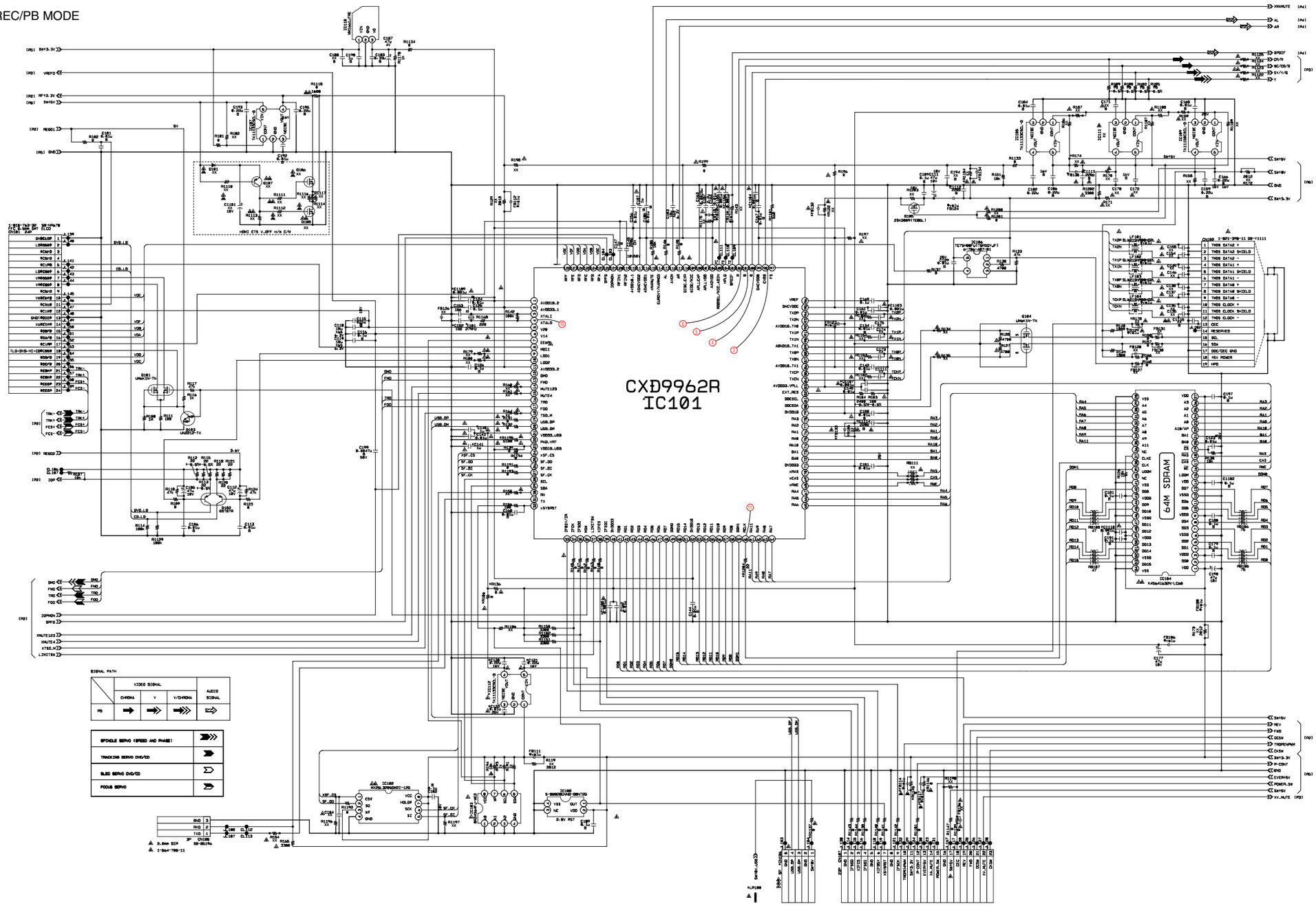

For Schematic Diagram

- Refer to page 4-13 to 4-14 for printed wiring board of MV-60 boards.
- Refer to page 4-5 to 4-6 for waveforms

MV-60 BOARD
Non Euro Model
(DVP-NS611HP/NS710H/NS710HP/NS717HP/
NS718HP/NS728HP)
NS718H:CND,AUS
NS728H:AUS

VIDEO/AUDIO
-REF.NO.:1000 SERIES-
XX MARK:NO MOUNT

NO MARK:REC/PB MODE

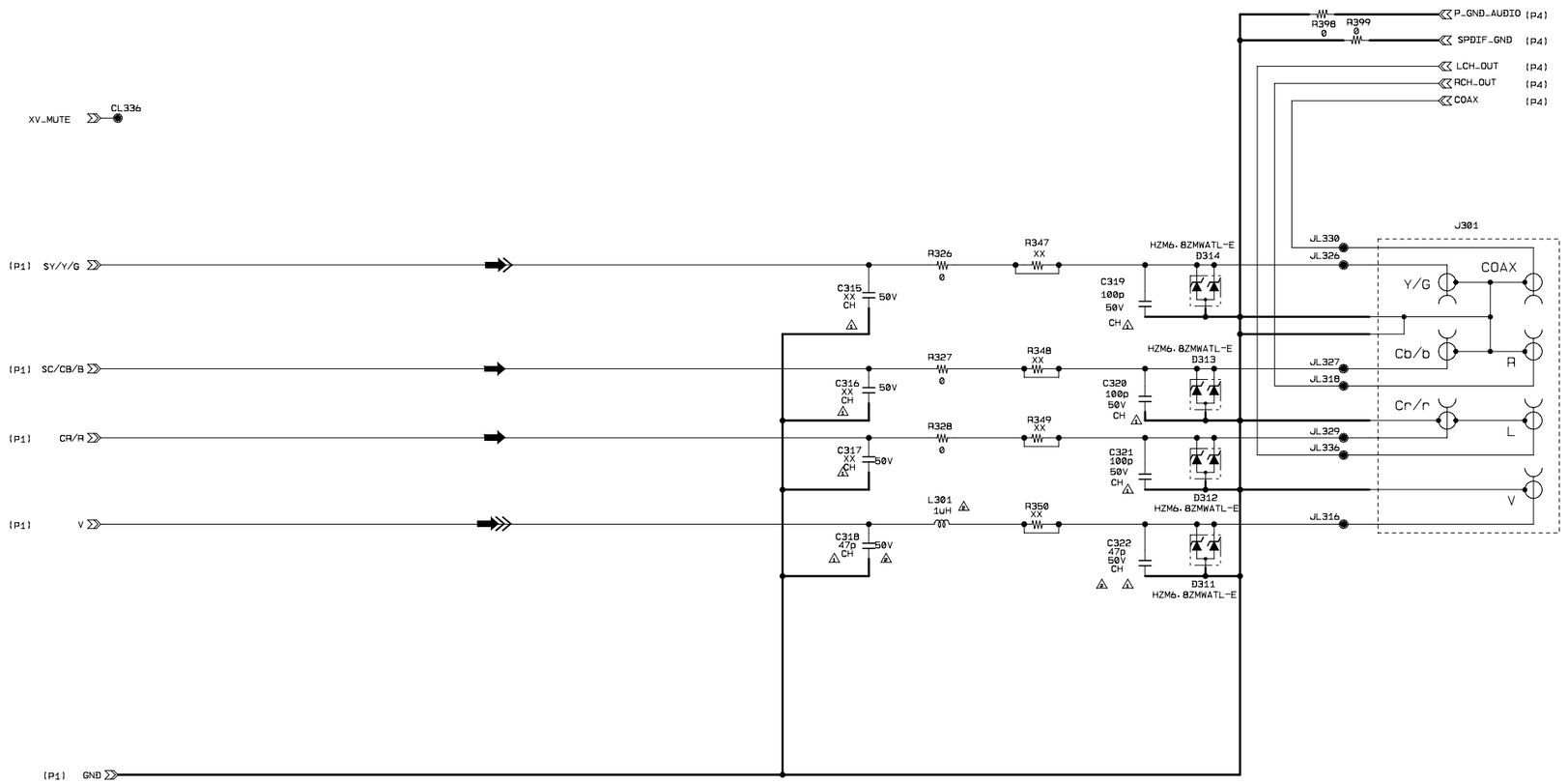

SIGNAL PATH

	VIDEO SIGNAL		
	CHROMA	Y	Y/CHROMA
PB	➡	➡	➡

For Schematic Diagram

• Refer to page 4-13 to 4-14 for printed wiring board of MV-60 boards.
• Refer to page 4-5 to 4-6 for waveforms

MV-60 BOARD
Non Euro Model
(DVP-NS611HP/NS710H/NS710HP/NS717HP/
NS718HP/NS728HP)
NS718H:CND,AUS
NS728H:AUS

AUDIO
-REF.NO.:1000 SERIES-
XX MARK:NO MOUNT

NO MARK:REC/PB MODE

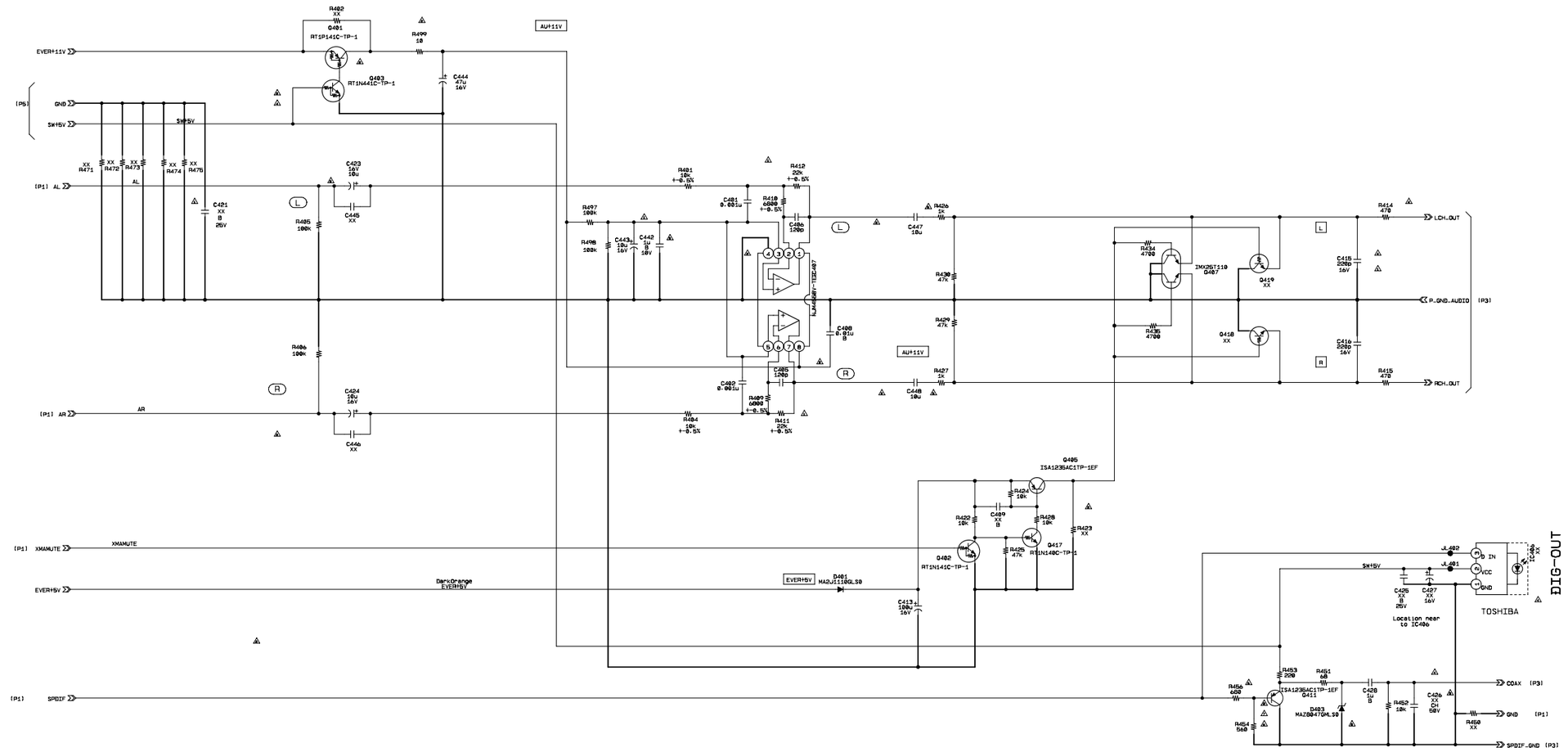

For Schematic Diagram

• Refer to page 4-15 to 4-16 for printed wiring board of MV-62 boards.
• Refer to page 4-5 to 4-6 for waveforms

MV-62 BOARD
Euro Model
(DVP-NS718H:AEP,UK,RUS/
NS728H:AEP,UK,RUS)

SYSTEM/SERVO
-REF.NO.:1000 SERIES-
XX MARK:NO MOUNT

NO MARK:REC/PB MODE

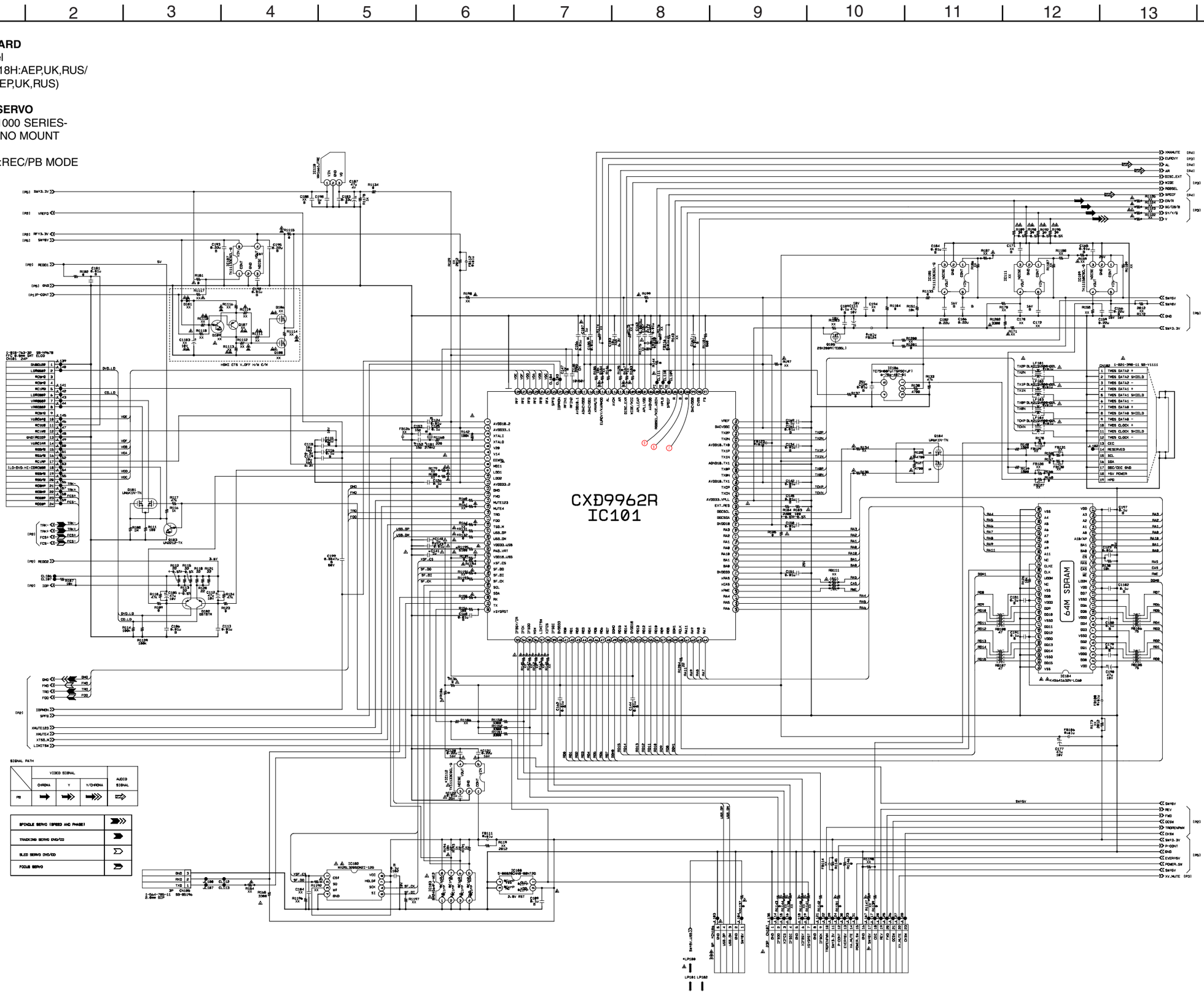

SYSTEM, SERVO
MV-62

For Schematic Diagram

• Refer to page 4-13 to 4-14 for printed wiring board of MV-60 boards.
• Refer to page 4-5 to 4-6 for waveforms

MV-62 BOARD
Euro Model
(DVP-NS718H:AEP,UK,RUS/
NS728H:AEP,UK,RUS)

VIDEO
-REF.NO.:1000 SERIES-
XX MARK:NO MOUNT

NO MARK:REC/PB MODE

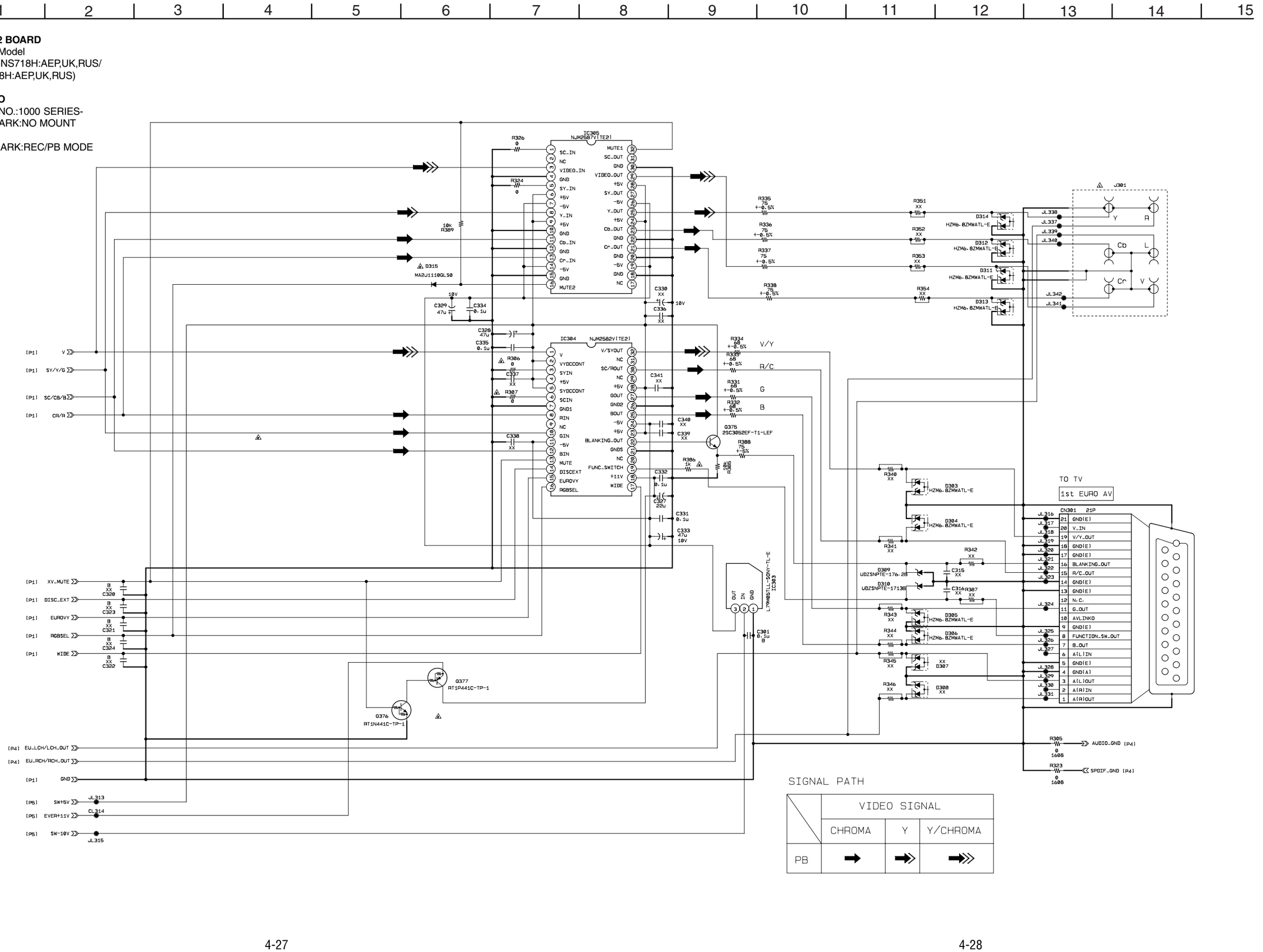

For Schematic Diagram

- Refer to page 4-15 to 4-16 for printed wiring board of MV-62 boards.
- Refer to page 4-5 to 4-6 for waveforms

MV-62 BOARD
Euro Model
(DVP-NS718H:AEP,UK,RUS/
NS728H:AEP,UK,RUS)

AUDIO
-REF.NO.:1000 SERIES-
XX MARK:NO MOUNT

NO MARK:REC/PB MODE

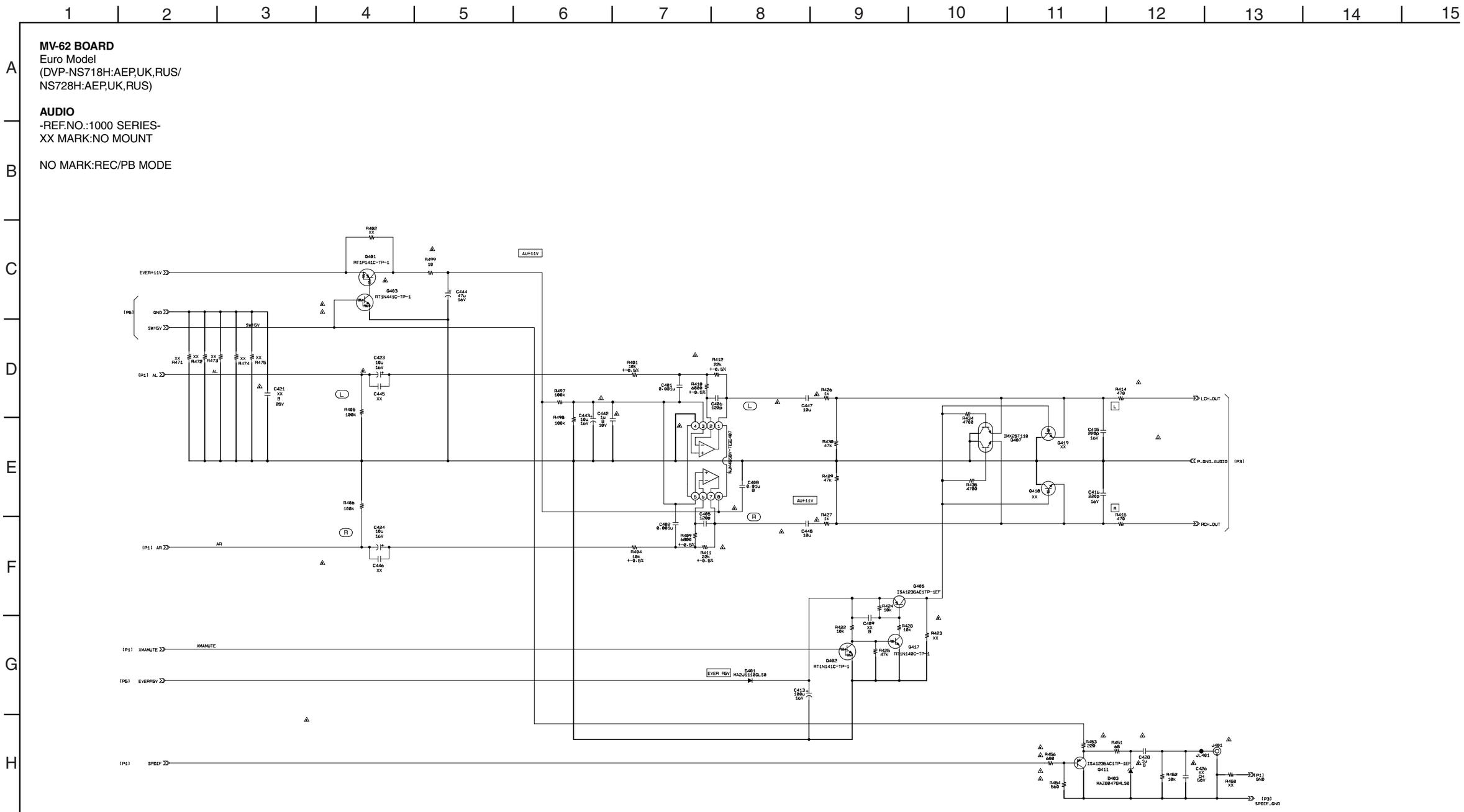

SWITCHING REGULATOR BOARD (SRV2187UC) PRINTED WIRING BOARD (DVP-NS611HP/NS710H:EXCEPT PX3/NS710HP/NS717HP) (NS718H:CND)

• : Uses unleaded solder.

SWITCHING REGULATOR BOARD (SRV2187UC) (SIDE A)

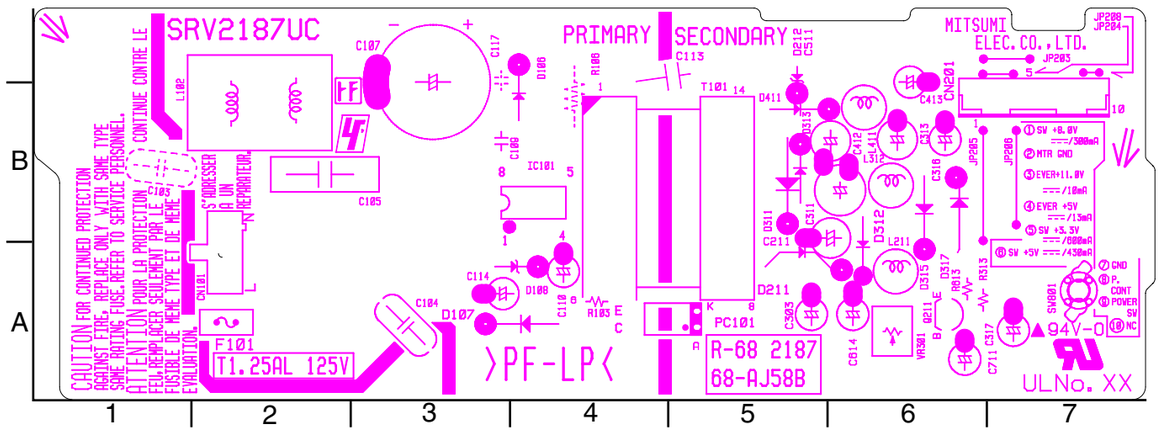

SWITCHING REGULATOR BOARD (SRV2187UC) (SIDE B)

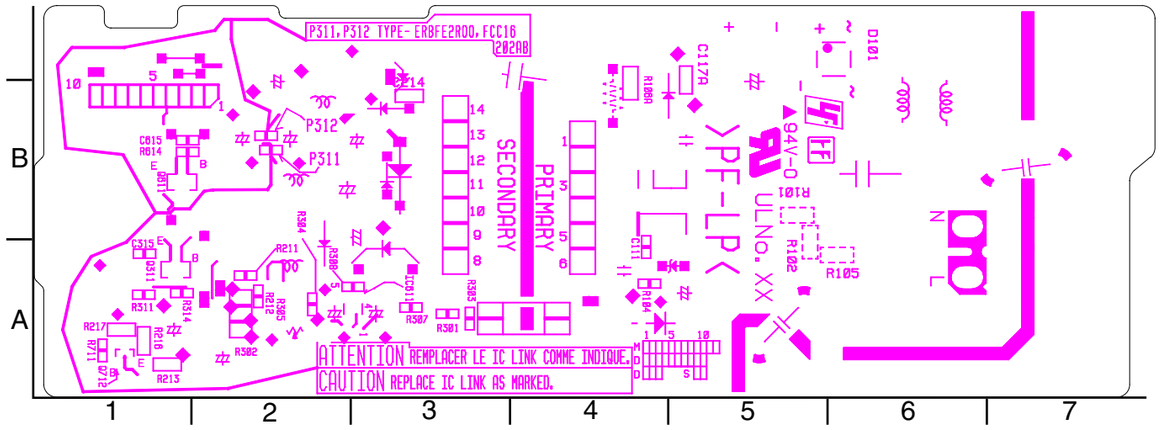

For printed wiring board

There are a few cases that the part printed on this diagram isn't mounted in this model.

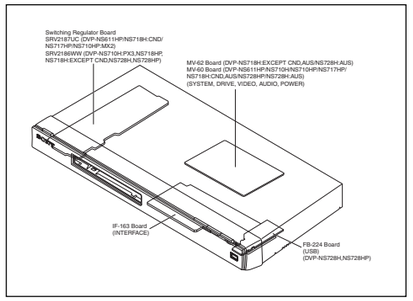

SWITCHING REGULATOR BOARD (SRV2187UC)

SIDE A

D100	A-4
D106	B-4
D107	A-3
D211	A-5
D212	C-5
D311	B-5
D312	A-6
D313	B-5
D315	A-6
D317	A-6
D411	B-5
IC101	B-4
Q211	A-6

SIDE B

D101	B-6
IC611	A-3
Q311	A-1
Q611	B-1
Q712	A-1

For Schematic Diagram

• Refer to page 4-21 to 4-22 for printed wiring board of Switching Regulator board (SRV2187UC).

SWITCHING REGULATOR BOARD
SWITCHING REGULATOR (SRV2187UC)
(DVP-NS611HP/NS710H/NS710HP:EXCEPT PX3/NS717HP)
(NS718H:CND)
-REF.NO.:1000 SERIES-
XX MARK:NO MOUNT

NO MARK:PB MODE
MARKED:MOUNT TABLE

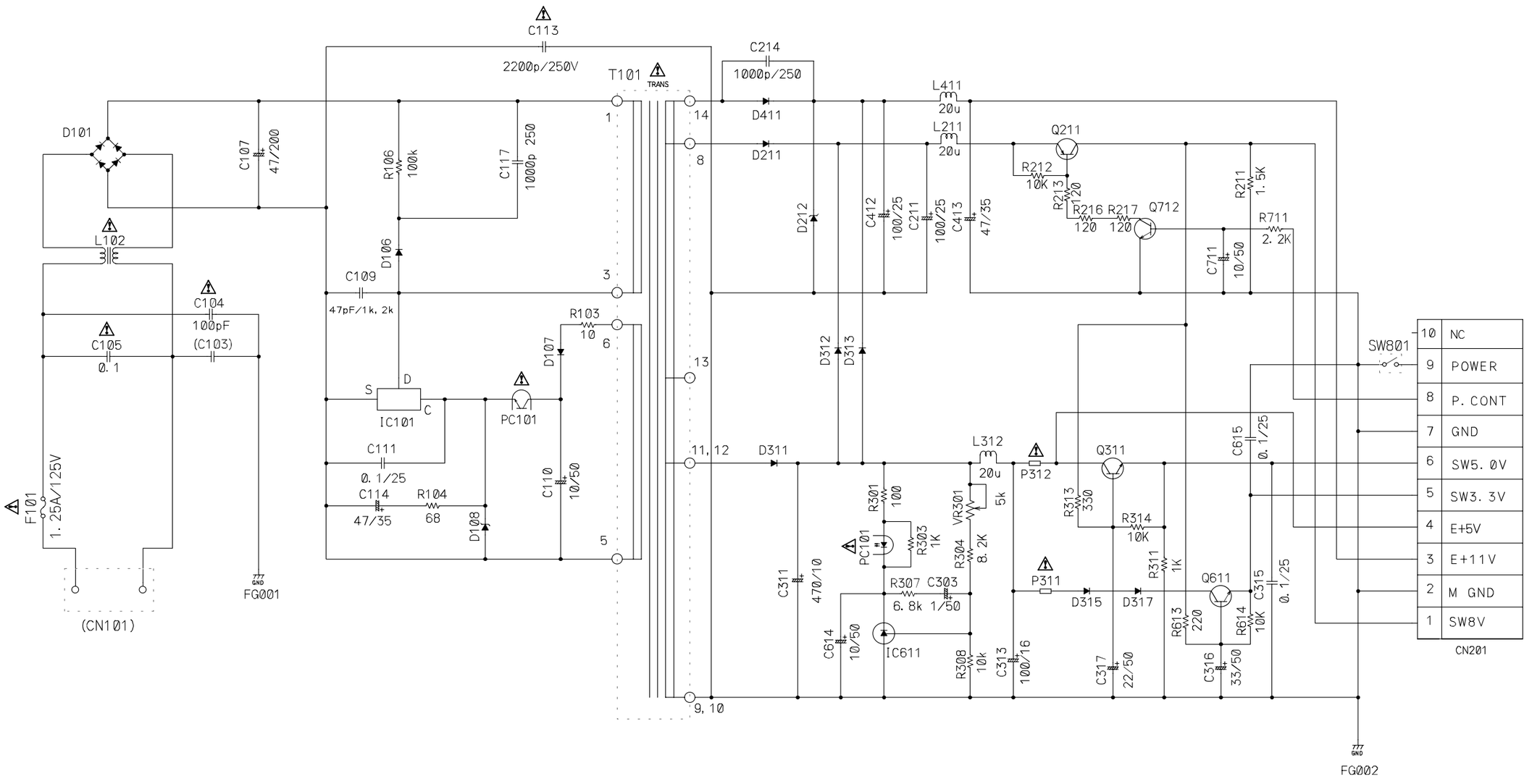

The components identified by mark ⚠ or dotted line with mark ⚠ are critical for safety.
Replace only with part number specified.

SWITCHING REGULATOR BOARD (SRV2186WW) PRINTED WIRING BOARD (DVP-NS718H:EXCEPT CA2/NS728H/NS718HP/NS728HP/NS710H:PX3)

• : Uses unleaded solder.

SWITCHING REGULATOR BOARD (SRV2186WW) (SIDE A)

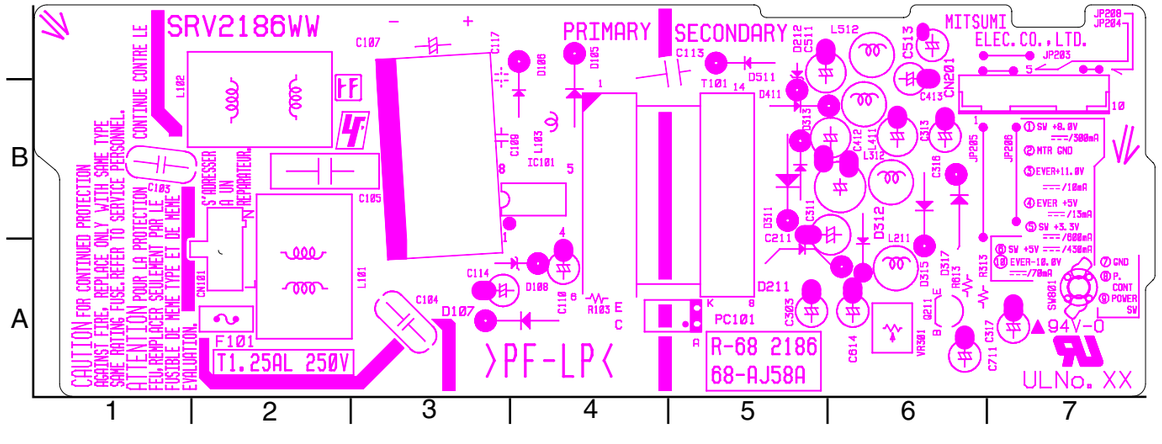

SWITCHING REGULATOR BOARD (SRV2186WW) (SIDE B)

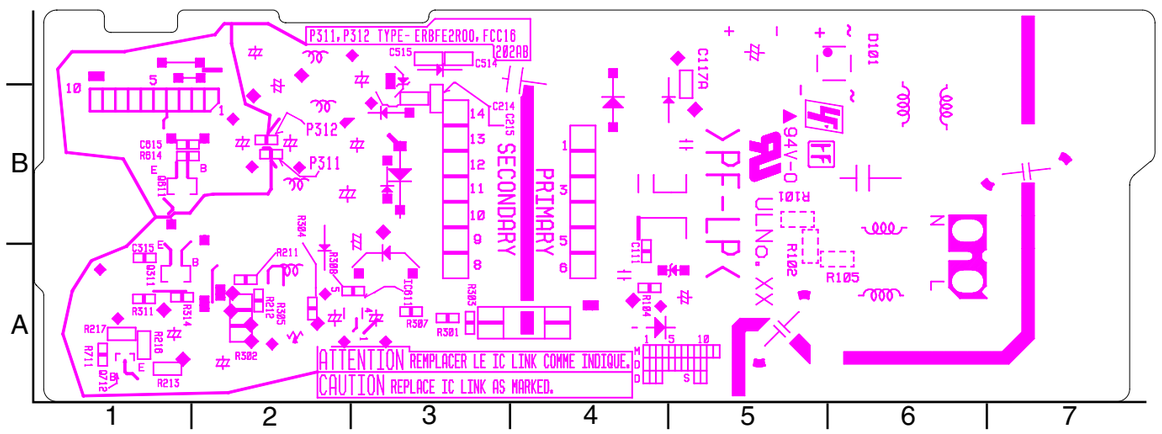

For printed wiring board

There are a few cases that the part printed on this diagram isn't mounted in this model.

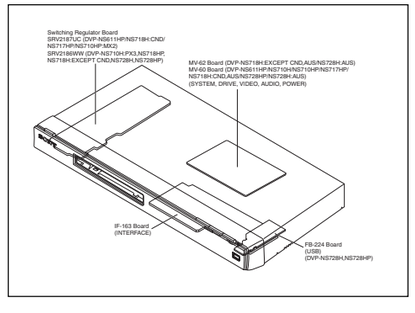

SWITCHING REGULATOR BOARD (SRV2186WW)

SIDE A

D100	A-4
D105	B-4
D106	B-4
D107	A-3
D211	A-5
D212	C-5
D311	B-5
D312	B-6
D313	B-5
D315	A-6
D317	A-6
D411	B-5
D511	B-5
IC101	B-4
Q211	A-6

SIDE B

D101	C-6
IC611	A-3
Q311	A-1
Q611	B-1
Q712	A-1

For Schematic Diagram

• Refer to page 4-25 to 4-26 for printed wiring board of Switching Regulator board (SRV2186WW).

SWITCHING REGULATOR BOARD
SWITCHING REGULATOR (SRV2186WW)
(DVP-NS718H:EXCEPT CA2/NS728H/NS718HP/
NS728HP/NS710H:PX3)
-REF.NO.:1000 SERIES-
XX MARK:NO MOUNT

NO MARK:PB MODE
MARKED:MOUNT TABLE

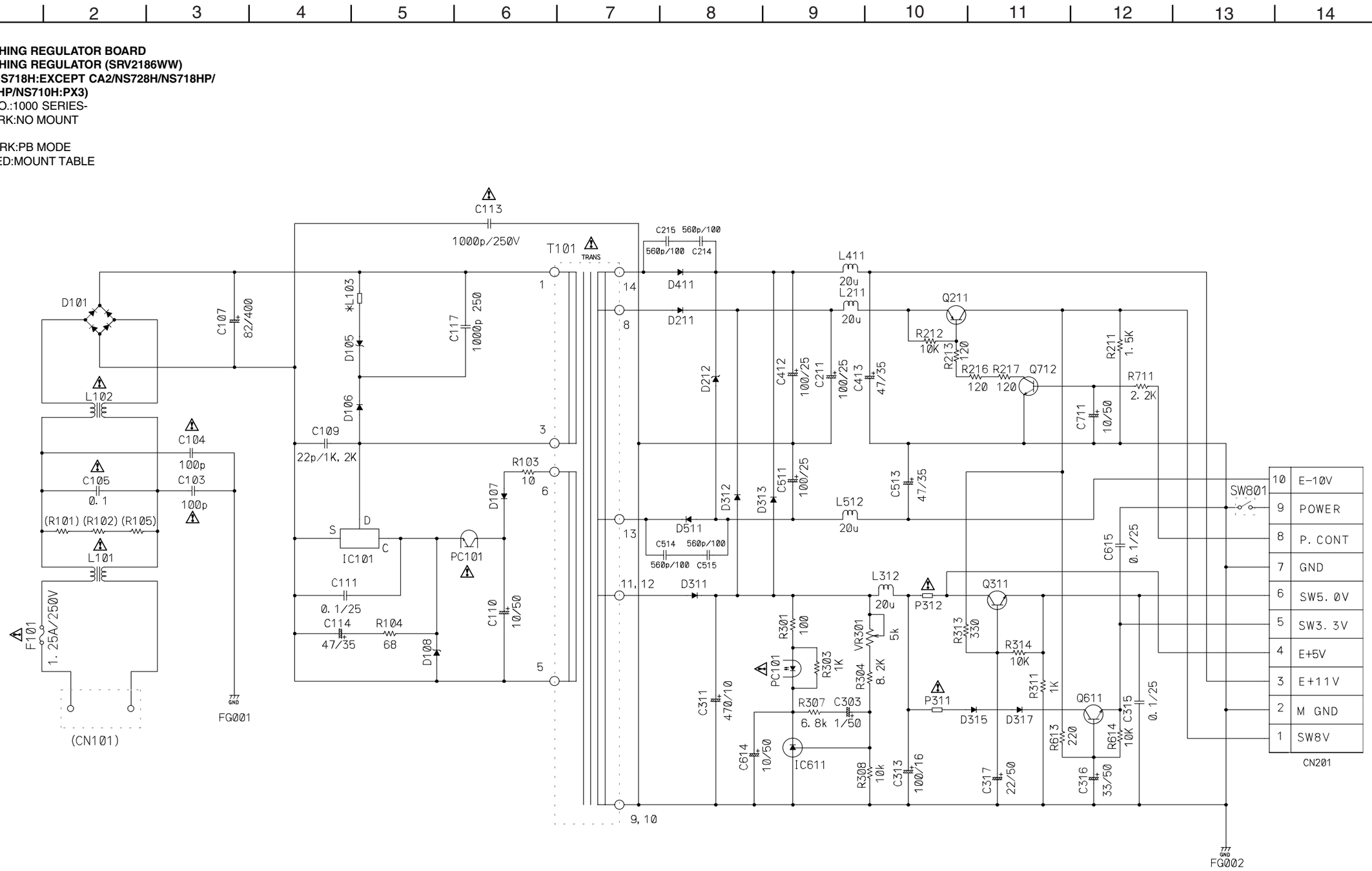

The components identified by mark ⚠ or dotted line with mark ⚠ are critical for safety.
Replace only with part number specified.

SECTION 5
IC PIN FUNCTION DESCRIPTION

5-1. SYSTEM CONTROL PIN FUNCTION (MV-60/62 BOARDS IC101)

Pin No.	Pin name	Type	Function
1	AVDD18_2	Analog Power	Analog 1.8V power
2	AVDD33_1	Analog Power	Analog 3.3V power
3	XTALI	Input	27MHz crystal input
4	XTALO	Output	27MHz crystal output
5	V20	Analog Output	Analog output Reference voltage 2.0V
6	V14	Analog Output	Analog output Reference voltage 1.4V
7	EEWP	Output	EEPROM Write Protect control (L : write allowed)
8	MDI1	Analog Input	Laser power monitor input
9	LDO1	Analog Output	Laser drive output
10	LDO2	Analog Output	Laser drive output
11	AVDD33_2	Analog Power	Analog 3.3V power
12	DMO	Analog Output	Disk motor control Output. PWM output
13	FMO	Analog Output	Feed motor control. PWM output
14	MUTE123	Output	Motor drive channel 1,2 & 3 mute
15	MUTE4	Output	Servo Driver MUTE Signal
16	TRO	Analog Output	Tracking servo output. PDM output of tracking servo compensator
17	FOO	Analog Output	Focus servo output. PDM output of focus servo compensator
18	TSD_M	Input	Motor driver thermal shutdown sensor (Active LOW)
19	MV-60 (DVP-NS728H/728HP ONLY) : USB_DP MV-60 (EXCEPT DVP-NS728H/728HP) : NC	Analog Inout	USB port DPLUS analog pin
	MV-62 (DVP-NS728H ONLY) : USB_DP MV-62 (EXCEPT DVP-NS728H) : NC		
20	MV-60 (DVP-NS728H/728HP ONLY) : USB_DM MV-60 (EXCEPT DVP-NS728H/728HP) : NC	Analog Inout	USB port DMINUS analog pin
	MV-62 (DVP-NS728H ONLY) : USB_DM MV-62 (EXCEPT DVP-NS728H) : NC		
21	VDD33_USB	USB Power	USB Power pin 3.3V
22	PAD_VRT	Analog Inout	USB generating reference current
23	VDD18_USB	USB Power	USB Power pin 1.8V
24	xSF_CS	Output, SR, PU, SMT	Serial Flash Chip Select (Active LOW)
25	SF_DO	Input, SR, PU, SMT	Serial Flash Dout
26	SF_DI	Output, SR, PU, SMT	Serial Flash Din
27	SF_CK	Output, SR, PU, SMT	Serial Flash Clock
28	SCL	Output, SR, PU, SMT	I2C clock pin
29	SDA	InOut, SR, PU, SMT	I2C data pin
30	RX	Input	Hardwared RS232C RX
31	TX	Output, PD	Hardwared RS232C TX
32	xSYSRST	Input, SR, PU, SMT	Power on reset input (Active LOW)
33	xIFBSY	Input, SR, SMT	Ext. CPU Ready/Busy interrupt signal (H: Busy, L: Ready)
34	IFCK	Output, SR, SMT	Ext. CPU Serial clock
35	IFSDO	Output, PD	Ext. CPU Serial data output
36	MSW	Output, PD	Mode Switch (H:DVD, L:CD)
37	LIMITSW	Output, PD	BU Limit Switch
38	xIFCS	Output	Chip select for Ext.CPU (Active LOW)
39	IFSDI	Output	Ext. CPU Serial data input
40	DVDD33	Power	3.3V power pin for internal digital circuitry
41	RD0	InOut	DRAM data 0
42	RD1	InOut	DRAM data 1
43	RD2	InOut	DRAM data 2

Pin No.	Pin name	Type	Function
44	RD3	InOut	DRAM data 3
45	RD4	InOut	DRAM data 4
46	RD5	InOut	DRAM data 5
47	RD6	InOut	DRAM data 6
48	RD7	InOut	DRAM data 7
49	DQM0	InOut, PD	Data Mask 0
50	RD15	InOut	DRAM data 15
51	RD14	InOut	DRAM data 14
52	DVDD18	Power	1.8V power pin for internal digital circuitry
53	RD13	InOut	DRAM data 13
54	RD12	InOut	DRAM data 12
55	RD11	InOut	DRAM data 11
56	RD10	InOut	DRAM data 10
57	RD9	InOut	DRAM data 9
58	RD8	InOut	DRAM data 8
59	DQM1	InOut, PD	Data Mask 1
60	RCLK	Output, PD	DRAM clock
61	RA11	InOut, PD	DRAM address 11
62	RA9	InOut, PD	DRAM address 9
63	RA8	InOut, PD	DRAM address 8
64	RA7	InOut, PD	DRAM adress 7
65	RA6	InOut, PD	DRAM address 6
66	RA5	InOut, PD	DRAM address 5
67	RA4	InOut, PD	DRAM address 4
68	XRWE	InOut, PD	DRAM Write enable (Active LOW)
69	XCAS	InOut, PD	DRAM Column address strobe (Active LOW)
70	XRAS	InOut, PD	DRAM Row address strobe (Active LOW)
71	DVDD33	Power	3.3V power pin for internal digital circuitry
72	BA0	InOut, PD	DRAM bank address 0
73	BA1	InOut, PD	DRAM bank address 1
74	RA10	InOut, PD	DRAM address 10
75	RA0	InOut, PD	DRAM address 0
76	RA1	InOut, PD	DRAM address 1
77	RA2	InOut, PD	DRAM address 2
78	RA3	InOut, PD	DRAM address 3
79	DVDD18	Power	1.8V Power pin for internal digital circuitry
80	DDCSDA	InOut, PD	DDC IIC Data (For HDMI™)
81	DDCSCL	InOut, PD	DDC IIC Clock (For HDMI™)
82	EXT_RES	Analog Input	EXTERNAL RESISTOR FOR HDMI™ TX
83	AVDD33_VPLL	Analog Power	3.3V VDD FOR HDMI™ TX
84	TXCN	Analog Output	Negative TX CLK
85	TXCP	Analog Output	Postive TX CLK
86	AVDD18_TX1	Analog Power	1.8V VDD FOR HDMI™ TX
87	TX0N	Analog Output	Negative TX CH0
88	TX0P	Analog Output	Postive TX CH0
89	AGND18_TX1	Ground	1.8V GND FOR HDMI™ TX
90	TX1N	Analog Output	Negative TX CH1
91	TX1P	Analog Output	Postive TX CH1
92	AVDD18_TX0	Power	1.8V VDD FOR HDMI™ TX
93	TX2N	Analog Output	Negative TX CH2
94	TX2P	Analog Output	Postive TX CH2
95	DACVDDC	Power	3.3V Power pin for video DAC circuitry
96	VREF	Analog	Bandgap reference voltage
97	FS	Analog	Full scale adjustment

Pin No.	Pin name	Type	Function
98	CVBS	Analog	Analog CVBS
99	DACVDDB	Power	3.3V Power pin for video DAC circuitry
100	G	Analog	Green, Y, SY, or CVBS
101	B	Analog	Blue, CB/PB or SC
102	R	Analog	Red, CR/PR, CVBS or SY
103	SPDIF	Analog	SPDIF output
104	HPLG	Input	Hot Plug Detection (For HDMI)
105	MV-60: NC	Output	RGB/YCbCr select output signal (H:RGB Disable, L:RGB Enable)
	MV-62: RGBSEL		
106	AADVDD	Power	3.3V Power pin for 2ch audio ADC circuitry
107	APLLVDD	Power	3.3V Power pin for audio clock circuitry
108	APLLCAP	Ground	APLL external capacitance connection
109	MV-60: NC	Analog Inout	Voltage select output signal for S terminal (H: 16:9, L: 4:3)
	MV-62: WIDE		
110	MV-60: NC	Output	DISC/External input select output signal (H: DISC, L: EXTin)
	MV-62: DISC_EXT		
111	AR	Analog Output	Audio DAC right channel output
112	AVCM	Analog	Audio DAC Reference voltage
113	AL	Analog Output	Audio DAC left channel output
114	MV-60: NC	Output	CVBS/S terminal select output signal (H: CBVS, L: S-terminal)
	MV-62: EUROVY		
115	XMAMUTE	Output	Main Audio Mute signal (H: Unmute, L: Mute)
116	ADACVDD1	Analog Power	3.3V Power pin for audio DAC circuitry
117	ADACVDD2	Analog Power	3.3V Power pin for audio DAC circuitry
118	AVDD18_1	Analog Power	Analog 1.8V power
119	RFIN2	Analog Input	AC Coupled DVD RF signal input RFIN
120	RFIN1	Analog Input	AC Coupled DVD RF signal input RFIN
121	IOPMON	Analog Input	General A/D input -> Iop Monitor
122	SPFG	Analog Input	Spindle motor brake
123	RFA (VOC)	Analog Input	RF main beam input C
124	RFB (VOB)	Analog Input	RF main beam input B
125	RFC (VOA)	Analog Input	RF main beam input A
126	RFD (VOD)	Analog Input	RF main beam input D
127	RFE (VOF)	Analog Input	RF sub beam input F
128	RFF (VOE)	Analog Input	RF sub beam input E

SECTION 6
TEST MODE

6-1. EXECUTING IOP MEASUREMENT

In order to execute IOP measurement, the following standard procedures must be followed.

(1) In standby mode, press [TOP MENU], [CLEAR], [POWER] to enter Remocon Diagnosis Mode.

```
Remocon Diagnosis Menu

0. External Chip Check
1. Servo Parameter Check
2. Drive Manual Operation
3. Emergency History
4. Version information
5. Video Level Adjustment

Model Name   : xxx xxx xxx
IF-con       : Ver. xxx
Syscon       : Ver. xxx
```

(2) Select "2. Drive Manual Operation" by pressing the [2] key on the remote commander. The screen will appear as below.

```
Drive Manual Operation

1. Servo Control
2. Track/Layer Jump
3. Manual Adjustment
4. Tray Aging Mode
0. Return to top Menu
```

(3) Select "3. Manual Adjustment" by pressing the [3] key on the remote commander. The screen will appear as below.

```
Manual Adjust

1. Track Balance Adjust:
2. Track Gain Adjust:
3. Focus Balance Adjust:
4. Focus Gain Adjust:
5. Eq Boost Adjust:
6. Iop:
7. TRV. Level:
8. S curve(FE) Level:
9. RFL(PI) Level:
0. MIRR Time:

[↑][↓] Change Value
[RETURN] Return to previous menu
```

(4) Select Iop by pressing [6] key on the remote commander.

(5) Wait until a hexadecimal number appear.

```
Manual Adjust

1. Track Balance Adjust:
2. Track Gain Adjust:
3. Focus Balance Adjust:
4. Focus Gain Adjust:
5. Eq Boost Adjust:
6. Iop(ED:)
7. TRV. Level:
8. S curve(FE) Level:
9. RFL(PI) Level:
0. MIRR Time:

[↑][↓] Change Value
[RETURN] Return to previous menu
```

(6) Convert data from hexadecimal to decimal.

(7) Use the following formula to calculate IOP in mA
IOP (mA)=IOP (decimal) x 0.622678.

(8) Press [RETURN] to return back to previous menu.

(9) Press [0] to return to Top Menu and power OFF the DVD Player.

6-2. EMERGENCY HISTORY CHECK

Information of Emergency History.

(1) In standby mode, press [TOP MENU], [CLEAR], [POWER] to enter Remocon Diagnosis Mode.

(2) Select "3. Emergency History".

```
Emg. History Check

Laser Hours        CD      999h    59min
                   DVD     999h    59min

1. 01 05 04 04             00 92 46 00
   00 00 00 00             00 00 23 45

2. 02 02 01 01             00 A9 4B 00
   00 00 00 00             00 00 23 45

[Next] Next Page [Prev] Prev Page
[0] Return to Top Menu
```

(3) Laser Hours
DVD Laser ON time. (Total ON time)
CD Laser ON time. (Total ON time)

(4) Emergency History
The history information from last "1" to "10" can be scrolled with [NEXT] key or [PREV] key.

(5) Error code

```
Example of Error code

1. [01]05 04 04            00 92 46 00
   00 00 00 00             00 00 23 45
```

(6) Error code list
01: Communication error (No reply from syscon)
02: Syscon hung up
03: Power OFF request when syscon hung up
19: Thermal shutdown
24: MoveSledHome error
25: Mecha move error (5 Changer)
26: Mecha move stack error
30: DC Motor adjustment error
31: DPD offset adjustment error
32: TE Balance adjustment error
33. TE Sensor adjustment error
34. TE loop gain adjustment error
35. FE loop gain adjustment error
36. Bad jitter after adjustment
40. Focus NG
42. Focus Layer Jump NG
50. Open kick spindle error
51: Spindle stop error
60: Focus on error
61: Seek fail error
62: read Qdata/ID error
70: Lead In Data Read Fail
71: TOC read time out (CD)
80: Can't Buffering
81: Unknown media type

(7) Error code parameters

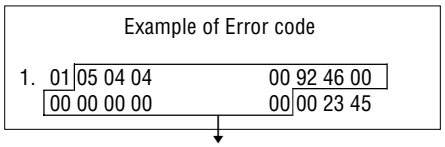

This is the detailed contents of error information
(For design used only)

(8) Laser hours at error happend.

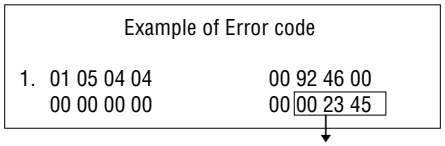

This is Laser hours when an error happened.

(9) How to Clear laser hours
Press [DISPLAY], [CLEAR] keys in this order.
Both CD and DVD data are cleared.

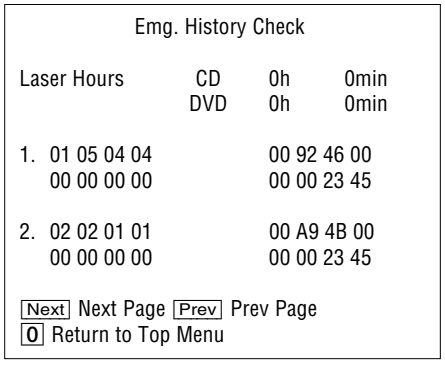

(10) How to Clearing Emergency code
Press [TOPMENU], [CLEAR] keys in this order.
All emergency code are cleared.

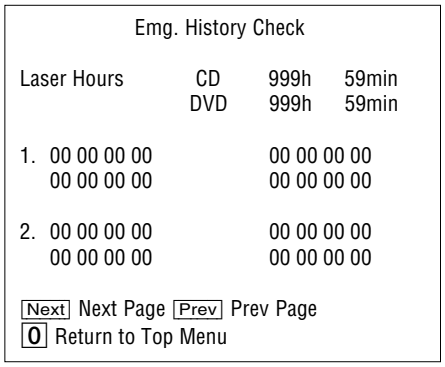

(11) Press [0] key, return to TOP MENU.

6-3. INITIALIZING SETUP DATA

How to initializing setup data.

(1) In standby mode, press [TOP MENU], [CLEAR], [POWER] to enter Remocon Diagnosis Mode.

(2) Select "3. Emergency History".

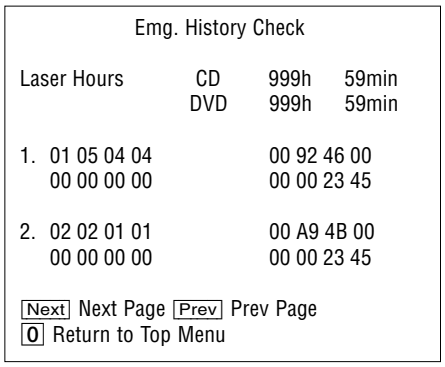

(3) Initializing setup data
Press [MENU], [CLEAR] keys in this order.
The data have been initialized when "Initialize setup data..." mesage is displayed.

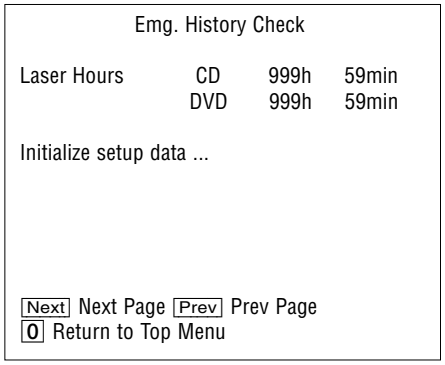

(4) The Emergency history display screen will be restored soon.

```
Emg. History Check

Laser Hours      CD     999h   59min
                 DVD    999h   59min

1. 01 05 04 04          00 92 46 00
   00 00 00 00          00 00 23 45

2. 02 02 01 01          00 A9 4B 00
   00 00 00 00          00 00 23 45

[Next] Next Page [Prev] Prev Page
[0] Return to Top Menu
```

(12) Press [0] key, return to TOP MENU.

6-4. VERSION INFORMATION

Information of firmware version.

(1) In standby mode, press [TOP MENU], [CLEAR], [POWER] to enter Remocon Diagnosis Mode.

(2) Select “4. Version Information”.

```
Version Information

Firm (Main)   : Ver. xxxxx
Firm (Sub)    : xxxxx
RISC          : xxxxx
8032          : xxxxx
Audio DSP     : xxxxx
Servo DSP     : xxxxx


[0] Return to Top Menu
```

(3) Press [0] key, return to TOP MENU.

6-5. IF CON SELF DIAGNOSTIC FUNCTION

1. IF163 BOARD (IF CON) TEST MODE

The IF-163 board (IF CON) test mode is the IF CON self-diagnosis mode. The IF CON can diagnose the functions of the IF-163 board that the IF CON controls. Normally, the IF CON makes a serial communication with the SYSTEM CONTROL and operates following the commands from the SYSTEM CONTROL, but in the Test mode, the IF CON operates independently from the SYSTEM CONTROL.

In the test mode, the following functions can be checked.
1. Button function
2. Remote commander receiving function
3. SYSTEM CONTROL-IF CON serial communication
4. Fluorescent display tube lighting check
   - Grid check
   - Anode check

In the test mode, the main unit operates same as usual, except voltage monitoring, communication, display of fluorescent display tube.
1. The routine that monitors +3.3V (PCONT) MV-60/MV-62 and board is not provided.
2. The monitoring timer for serial communication with the SYSTEM CONTROL is not provided. The main unit is not placed in the Standby mode, even if the communication with SYSTEM CONTROL is normal.
3. Display of fluorescent display tube.
   (Normally, display is mode following the commands from SYSTEM CONTROL).

2. OPERATION OF SELF CHECK MODE

The Self Check mode is the function to conduct the basic test to the FL display and DVD panel section.

2-1. Self Check Mode Transition Processing

At the AC Power ON after reset of IF CON is released, while pressing with the MV-60/MV-62 and board are not connected to the IF-163 board, or while pressing the [■] key on the main unit with the IF CON in STANDBY mode, enter [RETURN] → [DISPLAY] on the remote commander, and the main unit transits to the Self Check Mode.

2-2. Operation of Auto Self Check

When the Self Check mode becomes active at the AC Power ON or by key input, the test display of the following steps (1) to (4) is repeated.

(1) FLD and all ON (for 5 seconds)

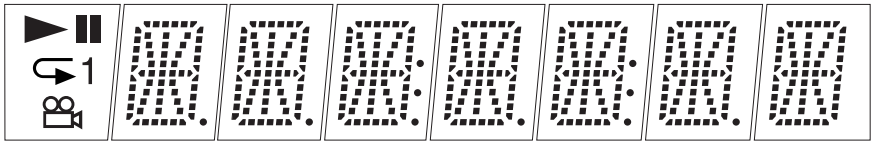

(2) MODEL display (for 2 seconds)

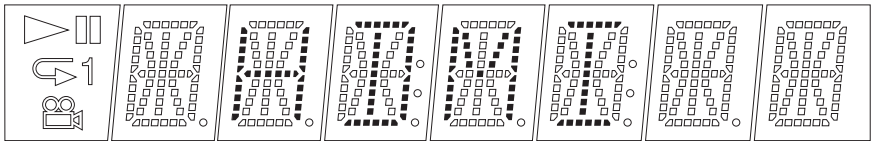

3) USB/NON USB (2 seconds)

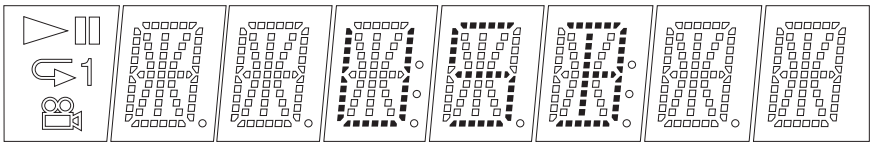

OR

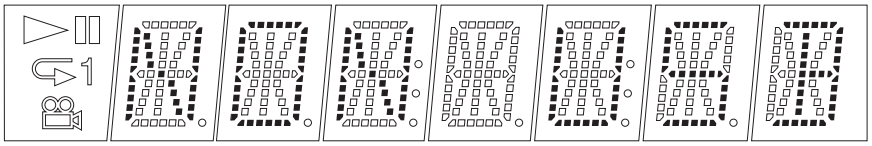

4) Version display (2 seconds)

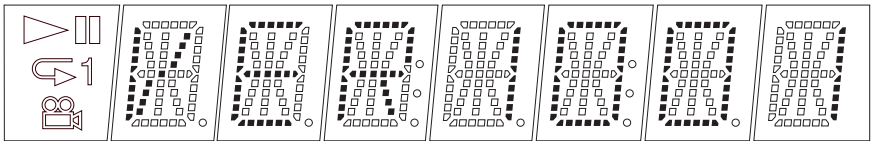

2-3. Each Self Check Function

Each Self Check function tests the FLD display, LED display, and key input.

Input	IC404: Pin No. (Signal)			
Voltage [V]	PIN ㉞ (AD1)	PIN ㉟ (O/C)	PIN ㊱ (AD2)	PIN ㊲ (POWER)
0 - 0.20	PLAY	OPEN/CLOSE	STOP	POWER
0.6 - 0.8				

2-3-1. FLD All ON

2-3-1-1. Transition Keys in Self Check Mode

- ⏏ key and ■ key on the main unit
- ← key on the remote commander

2-3-1-2. Operation and display

In this mode, all segments of FLD turn ON.

- Example of FLD all ON

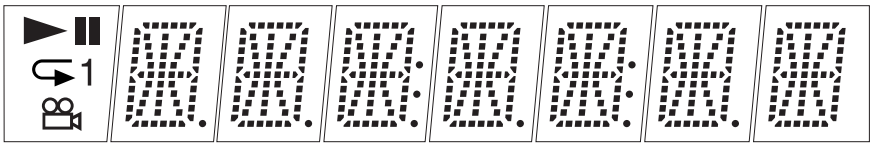

2-3-2. Main Unit Key Name Display and Key Code Display

2-3-2-1. Transition Keys in Self Check Mode

- Keys on the main unit except keys transited in Self Check Mode

2-3-2-2. Operation and Display

When a key on the main unit is pressed in the Self Check mode, the key code is displayed on the FLD. 'KEY FF' is displayed when nothing is entered. Also, PLAY, PAUSE, REPEAT ⏯ segments turn on when a communication error occurred.

- Key code display (at input of ▷ key, key code: 0Ah)

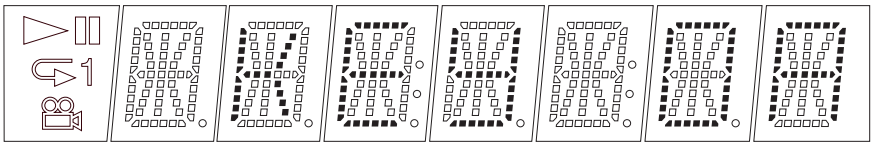

- At input of faulty voltage

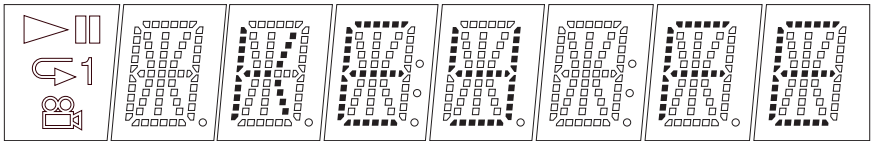

- When key is pressed double

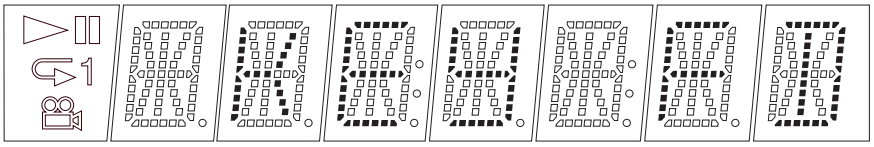

2-3-3. Remote Commander Key Name Display and Key Code Display

2-3-3-1. Transition Keys in Self Check Mode

- Remote commander keys except keys transited in Self Check Mode

2-3-3-2. Operation and Display

When a key on the remote commander is pressed in the Self Check Mode, the key code is displayed on the FLD. 'REM FF' is displayed nothing is entered. Also, ►II ↻ segments turn on when a communication error occurred.

- Remote commander key code display (at input of II key, key code:39h)

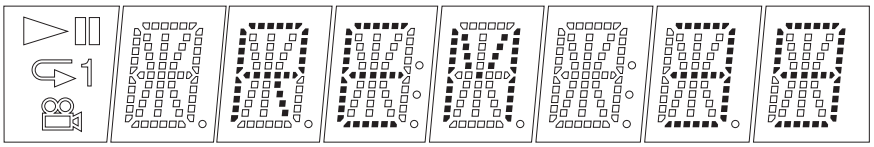

2-3-4. Communication Monitoring Display

The communication state is monitored and displayed while the key name on the main unit and the remote commander is displayed.

When the communication to the System Controller failed, PLAY, PAUSE, REPEAT ►II ↻ segments turn on.

- Communication error display (at code display without input of the remote commander)

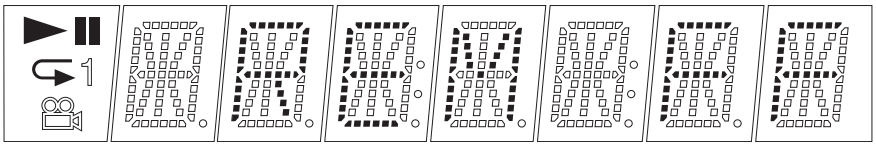

2-3-5. FLD Anode Test Display and SHUTTLE Click Operation Test

2-3-5-1. Transition Keys in Self Check Mode

- → key on the remote commander
- SHUTTLE on the remote commander during Anode Test display (This unit does not provide JOG/SHUTTLE, and therefore use another DVD remote commander having the JOG/SHUTTLE)

2-3-5-2. Operation and Display

The Self Check Mode transits to this mode when → key is entered. This tests whether each segment turns on individually. Only the first segment of each grid of FLD turns on, and each time the SHUTTLE is entered, the segment of each grid switched in order. When SHUTTLE input is clockwise or remote number 6, the segment switches in 1 - 2 -3 direction, or counterclockwise or remote number 4 it switches in 3 - 2- 1 direction.

- Display at the start of Anode Test

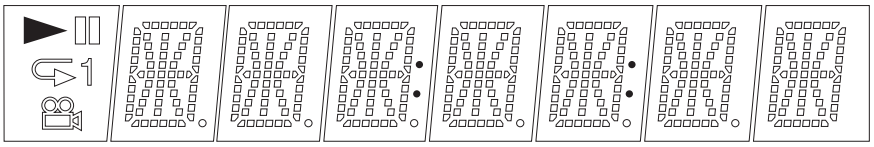

↓ (Input in CW direction)

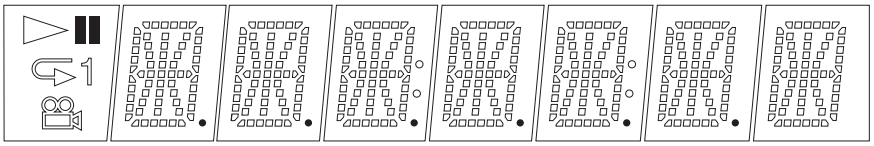

2-3-6. FLD Grid Test Display and SHUTTLE Click Operation Test

2-3-6-1. Transition Keys in Self Check Mode

- [↑] key on the remote commander
- SHUTTLE on the remote commander during Grid Test display
  (This unit does not provide JOG/SHUTTLE, and therefore use another DVD remote commander having the JOG/SHUTTLE)

2-3-6-2. Operation and Display

The Self Check Mode transits to this mode when [↑] key is entered. This tests whether each grid turns on individually. The first grid only of FLD turns on and other grid turn off. Each time the SHUTTLE is entered, the grid is switched in order. When SHUTTLE input is clockwise or remote number 6 repeatedly, the grid switched in 1 - 2 - 3 direction, or counterclockwise or remote number 4 repeatedly it switches in 3 - 2 - 1 direction.

- Display at the start of Grid Test

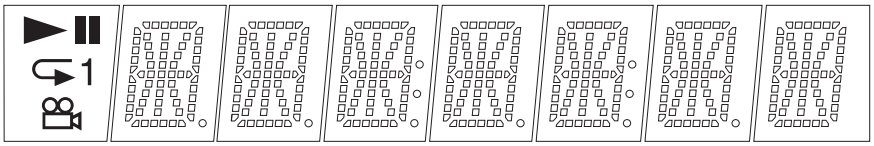

↓ (Input in CW direction)

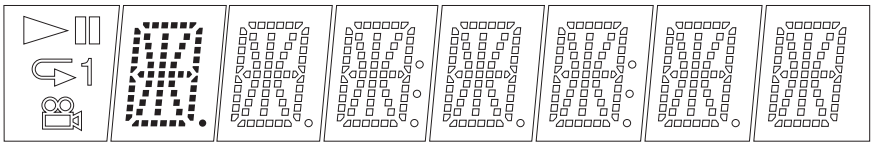

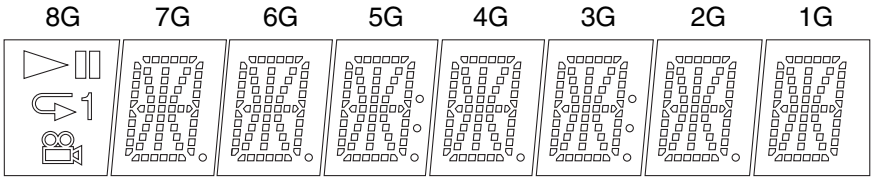

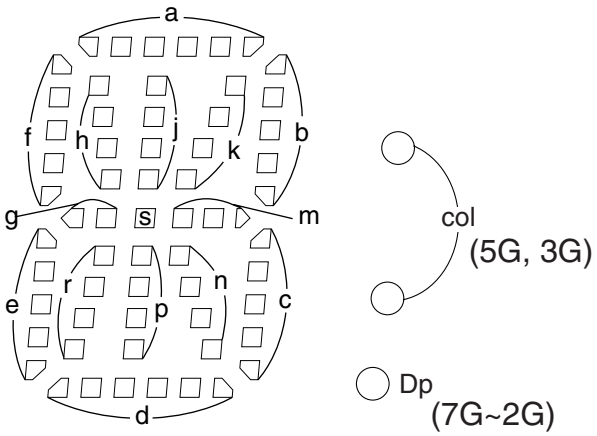

ANODE CONNECTION

	8G	7G	6G	5G	4G	3G	2G	1G
P1	▷	-	-	col	-	col	-	-
P2	▯▯	Dp	Dp	Dp	Dp	Dp	Dp	-
P3	↷	a	a	a	a	a	a	a
P4	1	k	k	k	k	k	k	k
P5	🎥	j	j	j	j	j	j	j
P6	-	h	h	h	h	h	h	h
P7	-	b	b	b	b	b	b	b
P8	-	f	f	f	f	f	f	f
P9	-	m	m	m	m	m	m	m
P10	-	s	s	s	s	s	s	s
P11	-	g	g	g	g	g	g	g
P12	-	c	c	c	c	c	c	c
P13	-	e	e	e	e	e	e	e
P14	-	n	n	n	n	n	n	n
P15	-	p	p	p	p	p	p	p
P16	-	r	r	r	r	r	r	r
P17	-	d	d	d	d	d	d	d

SECTION 7
ELECTRICAL ADJUSTMENT

This section describes procedures and instructions necessary for adjusting electrical circuits in this unit.

Instruments required:

(1) Color monitor TV
(2) Oscilloscope 1 or 2 phenomena, band width over 100 MHz, with delay mode
(3) Frequency counter (over 8 digits)
(4) Digital multimeter
(5) Standard commander (RMT-D187P/RMT-D189P/RMT-D187A)
(6) DVD reference disc
HLX-501 (J-6090-071-A) (dual layer) (NTSC)
HLX-503 (J-6090-069-A) (single layer) (NTSC)
HLX-504 (J-6090-088-A) (single layer) (NTSC)
HLX-505 (J-6090-089-A) (dual layer) (NTSC)

7-1. SWITCHING REGULATOR OUTPUT VOLTAGE CHECK

Mode	Except standby
Instrument	Digital multimeter
EVER +5 V Check	
Test point	CN201 pin ④
Specification	5.0 ± 0.3 Vdc
SW +3.3 V Check	
Test point	CN201 pin ⑤
Specification	$3.4\ ^{+0.2}_{-0.1}$ Vdc
SW+5 V Check	
Test point	CN201 pin ⑥
Specification	5.0 ± 0.3 Vdc
SW +8 V Check	
Test point	CN201 pin ①
Specification	8.0 ± 0.5 Vdc
EVER +11 V Check	
Test point	CN201 pin ③
Specification	$11.0\ ^{+2.5}_{-0.5}$ Vdc
* EVER –10 V Check	
Test point	CN201 pin ⑩
** Specification	$-10.2\ ^{+0.5}_{-2.5}$ Vdc
Specification	$-10.2\ ^{+0.5}_{-14.0}$Vdc

Checking method:

(1) Confirm that each voltage satisfies the specification.

Caution!
Please do not touch any electrical parts at primary circuit to avoid electrical shock.

Note:

* For SRV2186WW ONLY

** For AEP, Russian and UK model ONLY.

7-2. ADJUSTMENT OF VIDEO SYSTEM Euro Model (DVP-NS718H:AEP,UK,RUS/ NS728H:AEP,UK,RUS)

1. Checking Video Level

<Purpose>

Checking Video Level the NTSC/PAL standard, and if not correct, the brightness will be too large or small.

Mode	HLX-504 play back
Signal	Color bars 100%
Test point	LINE OUT (VIDEO) connector (75 Ω terminated)
Instrument	Oscilloscope
Specification	1.0 ± 0.08 Vp-p

Adjusting method:

(1) In the Video Signal menu "1" Color Bar 100% play back.
(2) Confirm that the Video Level is 1.0 ± 0.08 Vp-p.

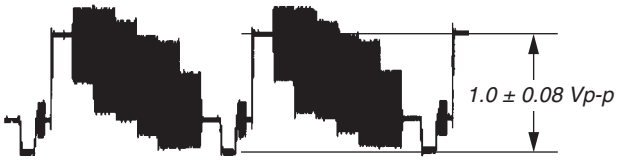

Fig. 7-1.

2. Checking Scart Video Output Level (Video Mode) (Euro Model)

<Purpose>

Check scart video output level. If it is incorrect, correct brightness will be too large or small.

Mode	HLX-504 play back
Signal	Color bars 100%
Test point	VIDEO OUT (19p) connector (75 W terminated)
Instrument	Oscilloscope
Specification	1.0 ± 0.08 Vp-p

Adjusting method:

(1) In the Video Signal menu "1" Color Bar 100% play back.
(2) Confirm that the video level is 1.0 ± 0.08 Vp-p.

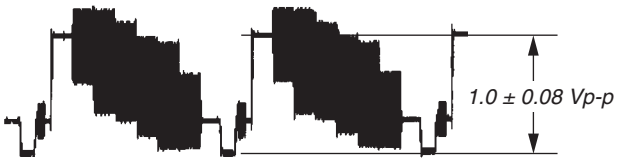

Fig. 7-2.

3. Checking RGB Output G (RGB Mode) (Europe Model)

<Purpose>

This checks RGB video output G level. If it is incorrect, correct color will not be remain some.

Mode	HLX-504 play back
Signal	Color bars
Test point	Green Out (11p) (75 Ω terminated)
Instrument	Oscilloscope
Specification	A = 700 ± 70mVp-p

Checking method:

(1) In the Video Signal menu "1" Color Bar 100% play back.
(2) Confirm that the G level is A.

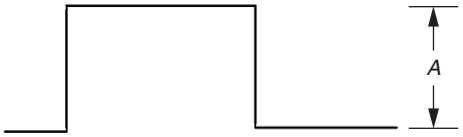

Fig. 7-3.

4. Checking RGB Output B (RGB Mode) (Europe Model)

<Purpose>

This checks RGB video output B level. If it is incorrect, correct colors will not be displayed when connected to, for instance, projector.

Mode	HLX-504 play back
Signal	Color bars
Test point	Blue Out, (7p) (75 Ω terminated)
Instrument	Oscilloscope
Specification	A = 700 ± 70 mVp-p

Checking method:

(1) In the Video Signal menu "1" Color Bar 100% play back.
(2) Confirm that the B level is A.

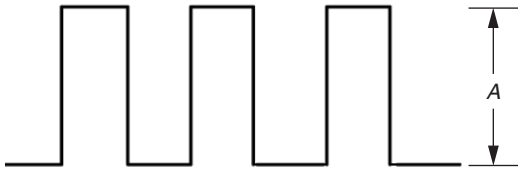

Fig. 7-4.

5. Checking RGB Output R (RGB Mode) (Europe Model)

<Purpose>

This checks RGB video output R level. If it is incorrect, correct colors will not be displayed when connected to, for instance, projector.

Mode	HLX-504 play back
Signal	Color bars
Test point	Red Out, (15p) (75 Ω terminated)
Instrument	Oscilloscope
Specification	A = 700 ± 70 mVp-p

Checking method:

(1) In the Video Signal menu "1" Color Bar 100% play back.
(2) Confirm that the R level is A.

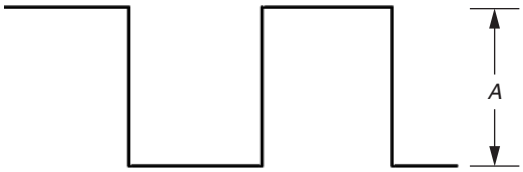

Fig. 7-5.

6. Checking Component Video Output Y

<Purpose>

This checks component video output Y. If it is incorrect, correct brightness will not be attained when connected to, for instance, projector.

Mode	HLX-504 play back
Signal	Color bars
Test point	COMPONENT VIDEO OUT (Y) connector, (75 Ω terminated)
Instrument	Oscilloscope
Specification	1.0 ± 0.08 Vp-p

Checking method:

(1) In the Video Signal menu "1" Color Bar 100% play back.
(2) Confirm that the Y level is 1.0 ± 0.08 Vp-p.

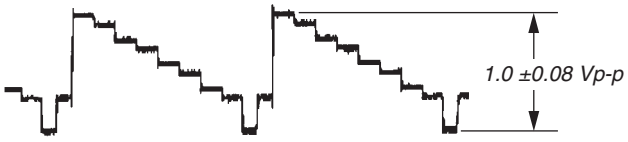

Fig. 7-6.

7. Checking Component Video Output B-Y

<Purpose>

This checks component video output B-Y. If it is incorrect, correct colors will not be displayed when connected to, for instance, projector.

Mode	HLX-504 play back
Signal	Color bars
Test point	COMPONENT VIDEO OUT (P_B) connector (75 Ω terminated)
Instrument	Oscilloscope
Specification	A = 700 ± 70 mVp-p

Checking method:

(1) In the Video Signal menu "1" Color Bar 100% play back.
(2) Confirm that the B-Y level is A.

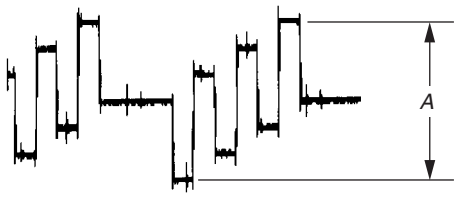

Fig. 7-7.

8. Checking Component Video Output R-Y

<Purpose>

This checks component video output R-Y. If it is incorrect, correct colors will not be displayed when connected to, for instance, projector.

Mode	HLX-504 play back
Signal	Color bars
Test point	COMPONENT VIDEO OUT (P_R) connector (75 Ω terminated)
Instrument	Oscilloscope
Specification	B = 700 ± 70 mVp-p

Checking method:

(1) In the Video Signal menu "1" Color Bar 100% play back.
(2) Confirm that the R-Y level is B.

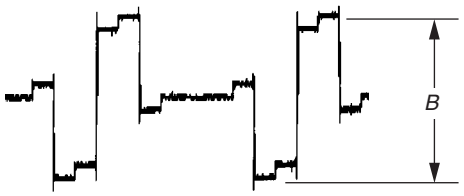

Fig. 7-8.

7-3. ADJUSTMENT OF VIDEO SYSTEM Non-Euro Model (DVP-NS611HP/NS710H/NS710HP/ NS717HP/NS718HP/NS728HP/) NS718:CND,AUS NS728H:AUS

1. Checking Video Level

<Purpose>

Checking Video Level the NTSC/PAL standard, and if not correct, the brightness will be too large or small.

Mode	HLX-504 play back
Signal	Color bars 100%
Test point	LINE OUT (VIDEO) connector (75 Ω terminated)
Instrument	Oscilloscope
Specification	1.0 ± 0.08 Vp-p/ 75 Ω termination

Adjusting method:

(1) In the Video Signal menu "1" Color Bar 100% play back.
(2) Confirm that the Video Level is 1.0 ± 0.08 Vp-p.

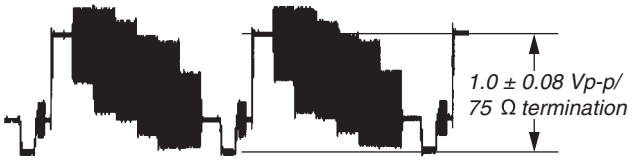

Fig. 7-9.

2. Checking Component Video Output Y

<Purpose>

This checks component video output Y. If it is incorrect, correct brightness will not be attained when connected to, for instance, projector.

Mode	HLX-504 play back
Signal	Color bars
Test point	COMPONENT VIDEO OUT (Y) connector, (75 Ω terminated)
Instrument	Oscilloscope
Specification	1.0 ± 0.08 Vp-p/ 75 Ω termination

Checking method:

(1) In the Video Signal menu "1" Color Bar 100% play back.
(2) Confirm that the Y level is 1.0 ± 0.08 Vp-p.

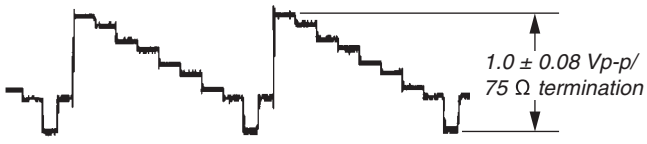

Fig. 7-10.

3. Checking Component Video Output B-Y

<Purpose>

This checks component video output B-Y. If it is incorrect, correct colors will not be displayed when connected to, for instance, projector.

Mode	HLX-504 play back
Signal	Color bars
Test point	COMPONENT VIDEO OUT (P_B) connector (75 Ω terminated)
Instrument	Oscilloscope
Specification	B = 700 ± 70mVp-p/ 75 Ω termination

Checking method:

(1) In the Video Signal menu "1" Color Bar 100% play back.
(2) Confirm that the B-Y level is B.

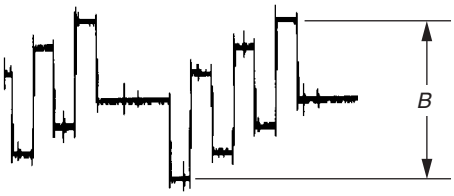

Fig. 7-11.

4. Checking Component Video Output R-Y

<Purpose>

This checks component video output R-Y. If it is incorrect, correct colors will not be displayed when connected to, for instance, projector.

Mode	HLX-504 play back
Signal	Color bars
Test point	COMPONENT VIDEO OUT (P_R) connector (75 Ω terminated)
Instrument	Oscilloscope
Specification	B = 700 ± 70 mVp-p/ 75 Ω termination

Checking method:

(1) In the Video Signal menu "1" Color Bar 100% play back.
(2) Confirm that the R-Y level is B.

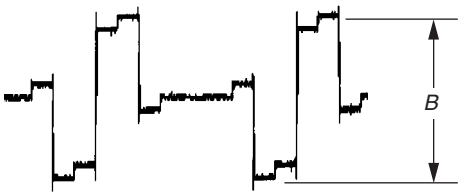

Fig. 7-12.

SECTION 8
REPAIR PARTS LIST

8-1. EXPLODED VIEWS

The components identified by mark⚠ or dotted line with mark⚠ are critical for safety.
Replace only with part number specified.

The components identified by mark🔒 contain confidential information.
Strictly follow the instructions whenever the components are repaired and/or replaced.

NOTE:

- -XX and -X mean standardized parts, so they may have some difference from the original one.
- Items marked "*" are not stocked since they are seldom required for routine service. Some delay should be anticipated when ordering these items.
- The mechanical parts with no reference number in the exploded views are not supplied.
- Color Indication of Appearance Parts
  Example:
  KNOB, BALANCE (WHITE) . . . (RED)
  R Parts Color
  R Cabinet's Color
- Abbreviation

AR : Argentina Model
AUS : Australia New Zealand Model
BR : Brazilian Model
CND : Canadian Model
E : Latin America Model
EA : Middle East Model
IN : India Model
IR : Iran Model
KS : Saudi Arabia Model
KR : Korea Model
MX : Mexican Model
RUS : Russian Model
SP : Singapore Model
TH : Thailand Model
TW : Taiwan Model

8-1-1. MAIN SECTION

ns : not supplied

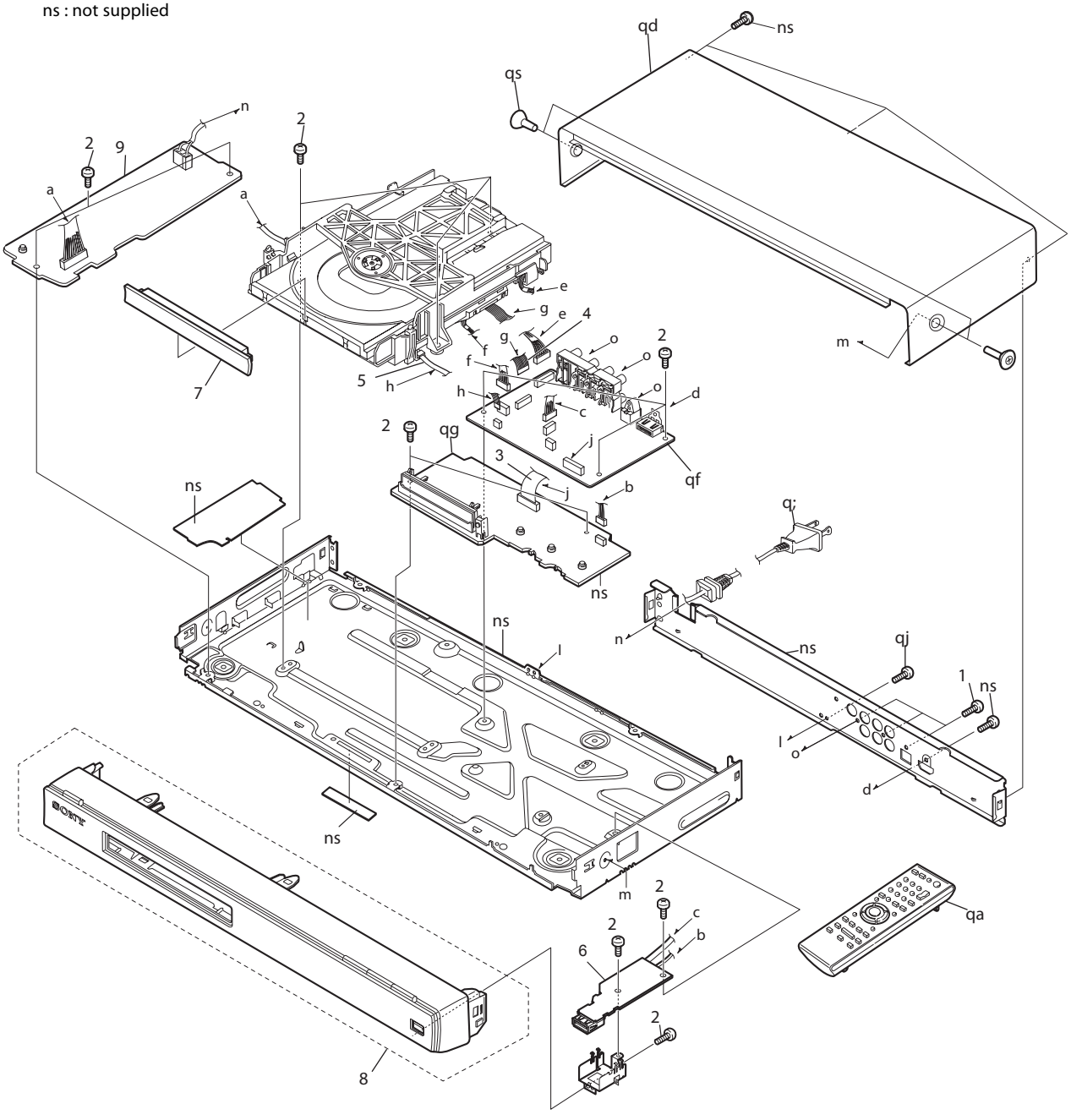

Ref. No.	Part No.	Description	Remark
1	3-077-331-11	+BV3 (3-CR)	
2	3-077-331-21	+BV3 (3-CR)	
3	1-836-235-11	FLEXIBLE FL AT CABLE (FIM-022)	
4	1-836-241-11	FLEXIBLE FLAT CABLE (FMO-018) (DVP-NS611HP/NS710H/NS710HP/NS717HP/ NS718H:CND,AUS,S P/NS718HP / NS728H:AUS,NS728HP:EXCEPT RUS)	
4	1-836-237-11	FLEXIBLE FLAT CABLE (FMO-019) (DVP-NS718H:AEP,UK,RUS/ NS728H:AE P,UK/NS728HP:RUS)	
5	1-836-236-11	FLEXIBLE FLAT CABLE (FMS-018) (DVP-NS611HP/NS710H/NS710HP/NS717HP/ NS718H:CND,AUS/NS718HP/ NS728H:AUS/NS728HP:EXCEPT RUS)	
5	1-836-234-11	FLEXIBLE FLAT CABLE (FMS-019) (NS718H:AE P,UK,RUS/NS728H:AEP,UK/NS728HP:RUS)	
6	A-1663-360-A	FB-224(2396LA) COMPL (DVP-NS728H/NS728HP:EXCEPT BR)	
* 7	4-120-380-01	COVER, TRAY (DVP-NS611HP/NS710H/NS710HP/NS717HP/ NS718H/NS718HP/NS72 8H/NS728HP: EXCEPT BR)	
* 7	4-120-380-11	COVER, TRAY (DVP-NS728HP:BR)	
* 8	X-2345-111-1	PANEL ASSY, FRONT (DVP-NS611HP) (BLACK)	
* 8	X-2320-938-1	PANEL ASSY, FRONT (DVP-NS710H) (BLACK)	
* 8	X-2345-349-1	PANEL ASSY, FRONT (DVP-NS710HP) (BLACK)	
* 8	X-2345-127-1	PANEL ASSY, FRONT (DVP-NS717HP) (BLACK)	
* 8	X-2345-348-1	PANEL ASSY, FRONT (DVP-NS718H:CND)	(BLACK)
* 8	X-2345-131-2	PANEL ASSY, FRONT (DVP-NS718H:AUS,AE P,RUS,UK/NS718HP)	(BLACK)
* 8	X-2345-132-1	PANEL ASS Y, FRONT (NS718H:AEP,RUS)	(SILVER)
* 8	X-2345-128-2	PANEL ASSY, FRONT (DVP-NS728H/NS728HP:EXCEPT BR)	(BLACK)
* 8	X-2345-140-1	PANEL ASSY, FRONT (DVP-NS728HP:SP)	(SILVER)
8	A-1660-788-A	PANEL BLOCK ASSY, FRONT (DVP-NS728HP:BR)	(BLACK)
⚠9	1-474-147-11	SWITCHING REGULATOR (DVP-NS611HP/NS710H:US/NS717HP/ NS718H:CND/NS710HP)	
⚠9	1-474-146-11	SWITCHING REGULATOR (NS710:PX/NS718H:AUS,AE P,RUS,UK/ NS718HP/NS728H/NS728HP)	
⚠10	1-828-451-31	POWER-SUPPLY CORD (DVP-NS611HP/NS710H:US,MX/NS717HP/ NS718H:CND/NS710HP)	
⚠10	1-828-450-11	POWER-SUPPLY CORD (DVP-NS710H:PX/NS718H:RUS,AEP/ NS718HP:SP,EA/NS728H:EXCEPT AUS,UK/ NS728HP:EXCEPT AR,IN,TH)	
⚠10	1-828-452-11	POWER-SUPP LY CORD (DVP-NS718H:AUS/ NS728:AUS)	
⚠10	1-828-846-11	POWER-SUPPLY CORD (DVP-NS718H:UK/NS728H:UK)	
⚠10	1-834-506-11	POWER-SUPP LY CORD (DVP-NS718HP:TH/NS728HP:TH)	
⚠10	1-828-845-11	POWER-SUPPLY CORD (DVP-NS718HP:TW)	
⚠10	1-828-871-11	POWER-SUPP LY CORD (DVP-NS718HP:KR)	
⚠10	1-828-460-11	POWER-SUPPLY CORD (DVP-NS728HP:AR)	

Ref. No.	Part No.	Description	Remark
⚠10	1-836-410-11	POWER SUPPLY CORD (DVP-NS728HP:IN)	
⚠10	1-835-688-21	POWER SUPPLY CORD (DVP-NS718HP:KS/728HP:KS)	
11	1-487-005-11	REMOTE COMMANDER (RMT-D187A) (DVP-NS611HP/NS718H:CND/ NS717HP/NS710H/NS710HP/ NS718HP:TW,KR/NS728HP:E,BR,AR)	(BLACK)
11	1-487-006-11	REMOTE COMMANDER (RMT-D187P) (DVP-NS718HP:S P,TH,EA,KS/ NS718H:AUS,AEP,UK,RUS/ NS728HP:S P,TH,EA,IN,RUS,KS/ NS728H:AUS,AE P,UK)	(BLACK)
11	1-487-024-11	REMOTE COMMANDER (RMT-D189P) (DVP-NS718H:AEP,RUS)	(SILVER)
12	3-710-901-61	SCREW, TAPPING	(SILVER)
12	3-710-901-71	SCREW, TAPPING	(BLACK)
13	A-1633-816-A	SERVICE ASSY, CASE UPPER	(BLACK)
13	A-1633-867-A	SERVICE ASSY, CASE UPPER	(SILVER)
14	A-1660-316-A	SERVICE ASSY, MV (DVP-NS611HP)	
14	A-1660-277-A	SERVICE ASSY, MV (DVP-NS710H)	
14	A-1660-737-A	SERVICE ASSY, MV (DVP-NS710HP)	
14	A-1663-517-A	SERVICE ASSY, MV (DVP-NS717HP)	
14	A-1660-705-A	SERVICE ASSY, MV (DVP-NS718H:CND)	
14	A-1663-812-A	SERVICE ASSY, MV (DVP-NS718H:AUS)	
14	A-1660-790-A	SERVICE ASSY, MV (DVP-NS718H:AEP,UK)	
14	A-1660-892-A	SERVICE ASSY, MV (DVP-N718H:RUS)	
14	A-1660-916-A	SERVICE ASSY, MV (DVP-NS718HP:SP,TH,KR)	
14	A-1663-565-A	SERVICE ASSY, MV (DVP-NS718HP:TW)	
14	A-1663-608-A	SERVICE ASSY, MV (DVP-NS718HP:EA,KS)	
14	A-1663-829-A	SERVICE ASSY, MV (DVP-NS728H:AUS)	
14	A-1663-541-A	SERVICE ASSY, MV (DVP-NS728H:AEP,UK)	
14	A-1704-162-A	SERVICE ASSY, MV (DVP-NS728H:RUS)	
14	A-1660-771-A	SERVICE ASSY, MV (DVP-NS728HP:E,AR)	
14	A-1660-781-A	SERVICE ASSY, MV (DVP-NS728HP:BR)	
14	A-1663-570-A	SERVICE ASSY, MV (DVP-NS728HP:SP,TH)	
14	A-1663-624-A	SERVICE ASSY, MV (DVP-NS728HP:EA,KS)	
14	A-1660-893-A	SERVICE ASSY, MV (DVP-NS728H:IN)	
15	A-1660-278-A	SERVICE ASS Y, IF (DVP-NS611HP/NS710H/NS710HP/NS717HP/ NS718H:CND,AUS/NS718HP)	
15	A-1660-791-A	SERVICE ASSY, IF (DVP-NS718H:AEP,RUS,UK)	
15	A-1663-516-A	SERVICE ASS Y, IF (NS728H:AUS/NS728HP:EXCEPT BR,RUS)	
15	A-1663-542-A	SERVICE ASSY,IF (NS728HP:RUS/ NS728H:AEP,UK)	
15	A-1660-782-A	SERVICE ASSY, IF (NS728HP:BR)	
16	7-682-144-09	SCREW +P 3X3	

Note :
The components identified by mark ⚠ or dotted line with mark ⚠ are critical for safety.
Replace only with part number specified.

Note :
The components identified by mark 🔒 contain confidential information. Strictly follow the instructions whenever the components are repaired and/or replaced.

8-1-2. MECHANISM DECK ASSEMBLY

ns : not supplied

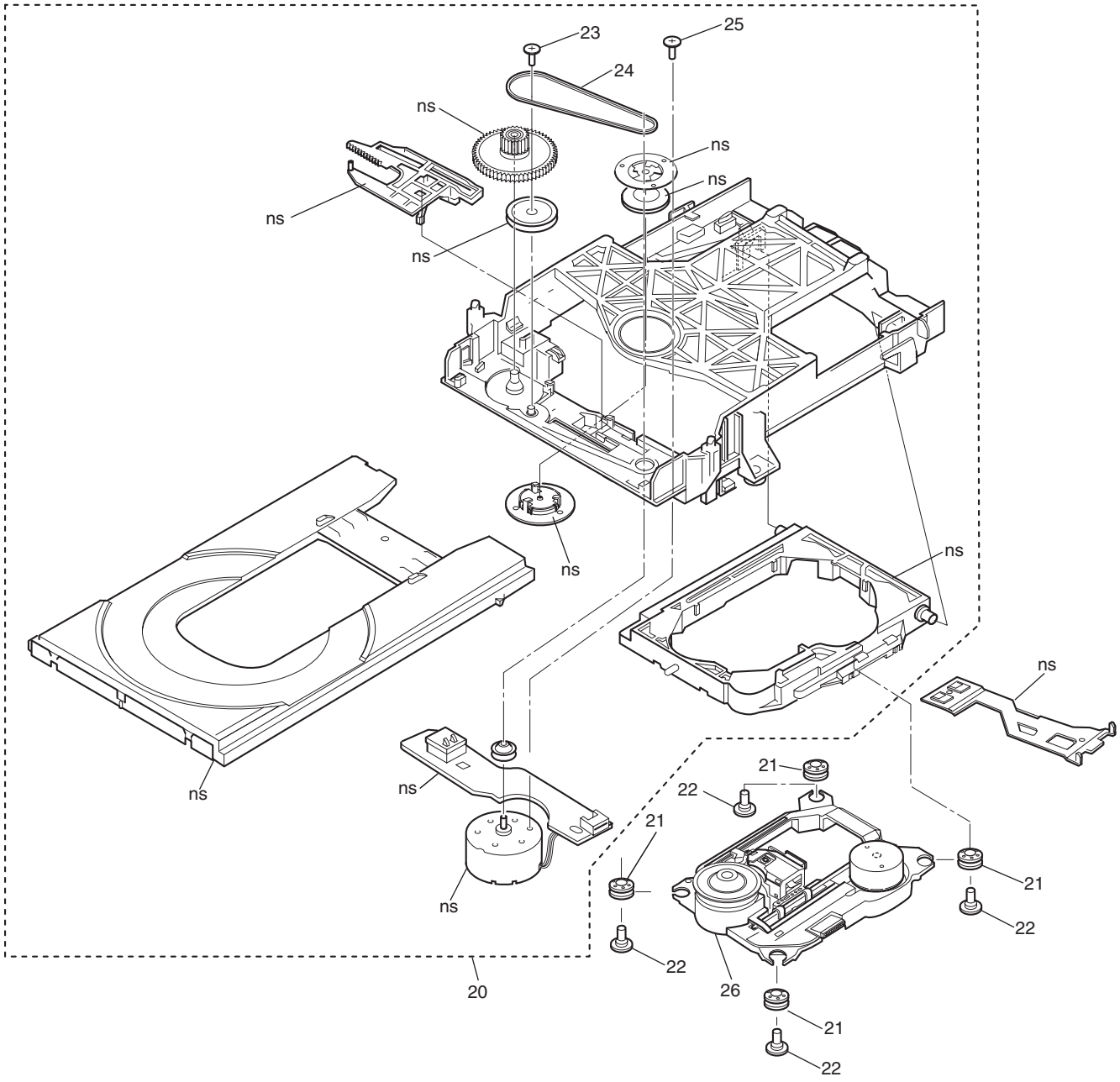

Ref. No.	Part No.	Description	Remark
20	A-6071-669-A	LOADING ASSY(M)	
21	3-088-372-01	INSULATOR	
22	3-087-599-01	INSULATOR SCREW	
23	4-674-137-11	SCREW (PTP2X5)	
24	3-088-371-01	BELT	
25	4-974-725-11	SCREW (M1.7X2.5), P	
⚠26	8-820-321-05	DEVICE,OPTICAL KHM-313CAA/C2RP	

Note :
The components identified by mark ⚠ or dotted line with mark ⚠ are critical for safety.
Replace only with part number specified.

IF-163

8-2. ELECTRICAL PARTS LIST

The components identified by mark⚠ or dotted line with mark⚠ are critical for safety.
Replace only with part number specified.

When indicating parts by reference number, please include the board.

The components identified by mark🔒 contain confidential information.
Strictly follow the instructions whenever the components are repaired and/or replaced.

NOTE:

- Due to standardization, replacements in the parts list may be different from the parts specified in the diagrams or the components used on the set.
- -XX and -X mean standardized parts, so they may have some difference from the original one.
- RESISTORS
  All resistors are in ohms.
  METAL: Metal-film resistor.
  METAL OXIDE: Metal oxide-film resistor.
  F: nonflammable
- Not all of the parts for SWITCHING REGULATOR are listed.
- Items marked * are not stocked since they are seldom required for routine service. Some delay should be anticipated when ordering these items.
- SEMICONDUCTORS
  In each case, u: µ, for example:
  uA. . : µA. . uPA. . : µPA. .
  uPB. . : µPB. . uPC. . : µPC. .
  uPD. . : µPD. .
- CAPACITORS
  uF: µF
- COILS
  uH: µH
- Abbreviation

AR : Argentina Model
AUS : Australia New Zealand Model
BR : Brazilian Model
CND : Canadian Model
E : Latin America Model
EA : Middle East Model
IN : India Model
IR : Iran Model
KS : Saudi Arabia Model
KR : Korea Model
MX : Mexican Model
RUS : Russian Model
SP : Singapore Model
TH : Thailand Model
TW : Taiwan Model

Ref. No.	Part No.	Description				Remark
	A-1660-278-A	SERVICE ASSY, IF-163				
		DVP-NS611HP, NS710H, NS710HP, NS717HP,				
		NS718H:CND,AUS,SP,TH,TW,KR				
	A-1660-791-A	SERVICE ASSY, IF-163				
		DVP-NS718H:AEP,UK				
	A-1663-516-A	SERVICE ASSY, IF-163				
		NS728H :AUS,NS728HP: EXCEPT RUS,BR				
	A-1660-782-A	SERVICE ASSY, IF-163				
		DVP-NS728HP:BR				
	A-1663-542-A	SERVICE ASSY,IF-163				
		DVP-NS728HP:RUS/NS728H:AEP,UK				
	**********					
		<CAPACITOR>				
C401	1-162-970-91	CERAMIC CHIP	0. 01UF	10.00%	25V	
C403	1-162-970-91	CERAMIC CHIP	0. 01UF	10.00%	25V	
C404	1-162-970-91	CERAMIC CHIP	0. 01UF	10.00%	25V	
C405	1-162-970-91	CERAMIC CHIP	0. 01UF	10.00%	25V	
C406	1-162-964-91	CERAMIC CHIP	0. 001UF	10.00%	50V	
C409	1-104-665-91	ELECT	100UF	20.00%	25V	
C410	1-106-363-91	MYLAR	0.0068UF	5.00%	200V	
C414	1-162-970-91	CERAMIC CHIP	0. 01UF	10.00%	25V	
C416	1-127-715-91	CERAMIC CHIP	0. 22UF	10%	16V	
C417	1-127-715-91	CERAMIC CHIP	0. 22UF	10%	16V	
C419	1-128-131-91	ELECT	22UF	20.00%	50V	
C421	1-126-786-91	ELECT	47UF	20%	16V	
		<CONNECTOR >				
CN402	1-568-952-11	PIN, CONNECTOR 3P				
		<DIODE>				
D402	6-501-193-01	DI ODE 1SS355WTE-17				
D402	6-501-817-01	DIODE MA2J1110GLS0				
D403	6-501-193-01	DI ODE 1SS355WTE-17				
D403	6-501-817-01	DIODE MA2J1110GLS0				
D406	6-501-726-01	DI ODE MAZ8047GMLS0				
		<IC>				
IC404	6-808-635-01	IC TMP86CM74AFG-7D36				
* IC406	6-600-626-01	IC GP1UW254GKC1				

Ref. No.	Part No.	Description				Remark
IC407	6-702-302-01	IC TK11133CSCL-G				
IC408	6-704-114-01	IC S-80828CNUA-B8NT2G				
		<CHIP CONDUCTOR>				
JR401	1-216-295-91	SHORT CHIP	0			
JR402	1-216-295-91	SHORT CHIP	0			
JR403	1-216-295-91	SHORT CHIP	0			
JR404	1-216-295-91	SHORT CHIP	0			
JR405	1-216-295-91	SHORT CHIP	0			
JR406	1-216-295-91	SHORT CHIP	0			
JR407	1-216-295-91	SHORT CHIP	0			
JR410	1-216-295-91	SHORT CHIP	0			
JR415	1-216-295-91	SHORT CHIP	0			
		<COIL>				
L401	1-408-982-81	I NDUCTOR 100UH				
		<FLUORESCENT>				
ND402	1-519-930-11	VA CUUM FLUORESCENT DISPLAYS				
		<TRANSISTOR>				
Q401	8-729-420-82	TRANSISTOR 2SD874A-R-TX				
Q402	8-729-420-82	TRANSISTOR 2SD874A-R-TX				
Q403	8-729-025-29	TRANSISTOR 2SK1828TE85L				
		<RESISTOR>				
R401	1-216-833-91	METAL CHIP	10K	5 %	1/10W	
R405	1-216-833-91	METAL CHIP	10K	5 %	1/10W	
R406	1-216-809-91	METAL CHIP	100	5%	1/10W	
R407	1-216-809-91	METAL CHIP	100	5%	1/10W	
R408	1-216-809-91	METAL CHIP	100	5%	1/10W	
R409	1-216-809-91	METAL CHIP	100	5%	1/10W	
R412	1-216-833-91	METAL CHIP	10K	5 %	1/10W	
R413	1-216-833-91	METAL CHIP	10K	5 %	1/10W	
R416	1-216-833-91	METAL CHIP	10K	5 %	1/10W	
R417	1-216-833-91	METAL CHIP	10K	5 %	1/10W	

Ref. No.	Part No.	Description			Remark
R418	1-216-833-91	METAL CHIP	10K	5%	1/10W
R419	1-216-833-91	METAL CHIP	10K	5%	1/10W
R420	1-216-810-91	METAL CHIP	120	5%	1/10W
R421	1-216-803-91	METAL CHIP	33	5%	1/10W
R422	1-216-845-91	METAL CHIP	100K	5%	1/10W
R423	1-216-829-91	METAL CHIP	4.7K	5%	1/10W
R424	1-216-809-91	METAL CHIP	100	5%	1/10W
R425	1-216-833-91	METAL CHIP	10K	5%	1/10W
R426	1-216-829-91	METAL CHIP	4.7K	5%	1/10W
R427	1-216-838-91	METAL CHIP	27K	5%	1/10W
R428	1-216-864-91	SHORT CHIP	0		
R435	1-216-864-91	SHORT CHIP	0		
R447	1-216-821-91	METAL CHIP	1K	5%	1/10W
R451	1-216-809-91	METAL CHIP	100	5%	1/10W
R452	1-216-809-91	METAL CHIP	100	5%	1/10W
R453	1-216-809-91	METAL CHIP	100	5%	1/10W
R454	1-216-838-91	METAL CHIP	27K	5%	1/10W
		<SWITCH>			
S402	1-771-874-11	SWI TCH, TACTILE			
S405	1-771-874-11	SWI TCH, TACTILE			
S407	1-771-874-11	SWI TCH, TACTILE			
		<TRANSFORMER>			
T401	1-445-625-11	DC-DC CONVER TER TRANSFORMER			
		<VIBRATOR>			
X401	1-781-472-21	VI BRATOR, CERAMIC			

	A-1663-360-A	FB-224(2396LA) COMPL (DVP-NS728H, NS728HP)
		**********
		<CAPACITOR>

C102	1-128-934-91	CERAMIC CHIP	0. 33UF	20%	10V
C104	1-128-934-91	CERAMIC CHIP	0. 33UF	20%	10V
C105	1-107-826-91	CERAMIC CHIP	0.1UF	10.00%	16V
C106	1-128-394-21	ELECT CHIP	220UF	20%	10V
C107	1-107-826-91	CERAMIC CHIP	0.1UF	10.00%	16V
C108	1-162-964-91	CERAMIC CHIP	0. 001UF	10.00%	50V
		<CONNECTOR>			
CN102	1-566-760-11	PIN, CONNECTOR (PC BOARD) 5P			
CN103	1-793-365-21	CONNECTOR, USB (A)			
		<FERRITE>			
FB101	1-469-324-21	FERRITE 0UH			
		<IC>			
IC101	6-700-294-01	IC MC7805ACD2TR4			

Ref. No.	Part No.	Description			Remark
		<INDUCTOR>			
LF101	1-456-799-11	I NDUCTOR 0UH			
		<RESISTOR>			
R102	1-216-864-91	SHORT CHIP	0		
R103	1-216-864-91	SHORT CHIP	0		
R106	1-218-885-91	METAL CHIP	39K	0.5%	1/10W
R107	1-216-864-91	SHORT CHIP	0		
R108	1-216-864-91	SHORT CHIP	0		
R109	1-216-833-91	METAL CHIP	10K	5%	1/10W

🔒	A-1660-316-A	SERVI CE ASSY, MV -60 (DVP-NS611HP)
🔒	A-1660-277-A	SERVICE ASSY, MV -60 (DVP-NS710H)
🔒	A-1660-737-A	SERVI CE ASSY, MV -60 (DVP-NS710HP)
🔒	A-1663-517-A	SERVI CE ASSY, MV -60 (DVP-NS717HP)
🔒	A-1660-705-A	SERVICE ASSY, MV -60 (DVP-NS718H:CND)
🔒	A-1663-812-A	SERVICE ASSY, MV-60 (DVP-NS718H:AUS)
🔒	A-1660-916-A	SERVI CE ASSY, MV-60 (DVP-NS718H:SP,TH,NS718HP:TH,KR)
🔒	A-1663-565-A	SERVI CE ASSY, MV -60 (DVP-NS718HP:TW)
🔒	A-1663-608-A	SERVICE ASSY, MV-60 (DVP-NS718HP:EA,KS)
🔒	A-1663-829-A	SERVICE ASSY, MV-60 (DVP-NS728H:AUS)
🔒	A-1660-771-A	SERVICE ASSY, MV-60 (DVP-NS728HP:E,AR)
🔒	A-1660-781-A	SERVICE ASSY, MV-60 (DVP-NS728HP:BR)
🔒	A-1663-570-A	SERVI CE ASSY, MV-60 (DVP-NS728HP:SP,TH)
🔒	A-1663-624-A	SERVICE ASSY, MV-60 (DVP-NS728HP:EA,KS)
🔒	A-1660-893-A	SERVICE ASSY, MV-60 (DVP-NS728HP:IN)
		**********
		<CAPACITOR>

C101	1-100-567-81	CERAMIC CHIP	0. 01UF	10%	25V
C102	1-125-777-81	CERAMIC CHIP	0. 1UF	10.00%	10V
C103	1-100-909-11	CERAMIC CHIP	10UF	10%	6.3V
C105	1-128-994-21	ELECT CHIP	47UF	20%	10V
C106	1-100-567-81	CERAMIC CHIP	0. 01UF	10%	25V
C107	1-112-717-91	CERAMIC CHIP	1UF	10%	6.3V
C109	1-125-777-81	CERAMIC CHIP	0. 1UF	10.00%	10V
C111	1-128-994-21	ELECT CHIP	47UF	20%	10V
C112	1-128-994-21	ELECT CHIP	47UF	20%	10V
C113	1-100-567-81	CERAMIC CHIP	0. 01UF	10%	25V
C115	1-125-777-81	CERAMIC CHIP	0. 1UF	10.00%	10V
C116	1-125-777-81	CERAMIC CHIP	0. 1UF	10.00%	10V
C118	1-100-909-11	CERAMIC CHIP	10UF	10%	6.3V
C119	1-100-909-11	CERAMIC CHIP	10UF	10%	6.3V
C120	1-127-715-91	CERAMIC CHIP	0. 22UF	10%	16V
C121	1-127-715-91	CERAMIC CHIP	0. 22UF	10%	16V
C122	1-100-567-81	CERAMIC CHIP	0. 01UF	10%	25V
C123	1-100-567-81	CERAMIC CHIP	0. 01UF	10%	25V
C124	1-100-567-81	CERAMIC CHIP	0. 01UF	10%	25V
C125	1-125-777-81	CERAMIC CHIP	0. 1UF	10.00%	10V

The components identified by mark 🔒 contain confidential information. Strictly follow the instructions whenever the components are repaired and/or replaced.

MV-60

Ref. No.	Part No.	Description	Remark
C126	1-125-777-81	CERAMIC CHIP 0.1UF 10.00% 10V	
C129	1-100-567-81	CERAMIC CHIP 0. 01UF 10% 25V	
C134	1-100-567-81	CERAMIC CHIP 0. 01UF 10% 25V	
C140	1-112-717-91	CERAMIC CHIP 1UF 10% 6.3V	
C141	1-100-567-81	CERAMIC CHIP 0. 01UF 10% 25V	
C141	1-112-717-91	CERAMIC CHIP 1UF 10% 6.3V	
C142	1-100-567-81	CERAMIC CHIP 0. 01UF 10% 25V	
C143	1-100-567-81	CERAMIC CHIP 0. 01UF 10% 25V	
C144	1-100-567-81	CERAMIC CHIP 0. 01UF 10% 25V	
C145	1-100-567-81	CERAMIC CHIP 0. 01UF 10% 25V	
C147	1-165-908-91	CERAMIC CHIP 1UF 10% 10V	
C148	1-164-230-91	CERAMIC CHIP 220PF 5.00% 50V	
C150	1-100-567-81	CERAMIC CHIP 0. 01UF 10% 25V	
C151	1-100-567-81	CERAMIC CHIP 0. 01UF 10% 25V	
C152	1-162-918-91	CERAMIC CHIP 18PF 5.00% 50V (EXCEPT DVP-NS718HP:SP,TH,KR,EA,KS,TW & AUS ONLY)	
C152	1-162-917-91	CERAMIC CHIP 15PF 5.00% 50V (DVP-NS718HP:SP,TH,KR,EA,KS,TW & AUS ONLY)	
C153	1-162-917-91	CERAMIC CHIP 15PF 5.00% 50V	
C156	1-100-567-81	CERAMIC CHIP 0. 01UF 10% 25V	
C156	1-100-567-81	CERAMIC CHIP 0. 01UF 10% 25V	
C157	1-165-884-91	CERAMIC CHIP 2.2UF 10% 6.3V	
C159	1-127-715-91	CERAMIC CHIP 0. 22UF 10% 16V	
C160	1-100-567-81	CERAMIC CHIP 0. 01UF 10% 25V	
C161	1-100-567-81	CERAMIC CHIP 0. 01UF 10% 25V	
C162	1-100-567-81	CERAMIC CHIP 0. 01UF 10% 25V	
C163	1-164-938-81	CERAMIC CHIP 0.0015UF 10.00% 50V	
C164	1-100-567-81	CERAMIC CHIP 0. 01UF 10% 25V	
C165	1-100-567-81	CERAMIC CHIP 0. 01UF 10% 25V	
C166	1-127-715-91	CERAMIC CHIP 0. 22UF 10% 16V	
C167	1-100-567-81	CERAMIC CHIP 0. 01UF 10% 25V	
C169	1-125-777-81	CERAMIC CHIP 0.1UF 10.00% 10V	
C177	1-128-994-21	ELECT CHIP 47UF 20% 10V	
C179	1-125-777-81	CERAMIC CHIP 0.1UF 10.00% 10V	
C180	1-125-777-81	CERAMIC CHIP 0.1UF 10.00% 10V	
C181	1-125-777-81	CERAMIC CHIP 0.1UF 10.00% 10V	
C182	1-127-715-91	CERAMIC CHIP 0.22UF 10% 16V	
C183	1-114-411-21	CERAMIC CHIP 0. 33UF 10% 6.3V	
C184	1-100-567-81	CERAMIC CHIP 0. 01UF 10% 25V	
C185	1-100-567-81	CERAMIC CHIP 0. 01UF 10% 25V	
C186	1-127-715-91	CERAMIC CHIP 0. 22UF 10% 16V	
C187	1-126-208-21	ELECT CHIP 47UF 20.00% 4V	
C189	1-125-777-81	CERAMIC CHIP 0.1UF 10.00% 10V	
C190	1-128-994-21	ELECT CHIP 47UF 20% 10V	
C191	1-125-777-81	CERAMIC CHIP 0.1UF 10.00% 10V	
C192	1-100-567-81	CERAMIC CHIP 0. 01UF 10% 25V	
C193	1-127-715-91	CERAMIC CHIP 0. 22UF 10% 16V	
C195	1-127-715-91	CERAMIC CHIP 0. 22UF 10% 16V	
C197	1-125-777-81	CERAMIC CHIP 0.1UF 10.00% 10V	
C198	1-165-908-91	CERAMIC CHIP 1UF 10% 10V	
C199	1-162-968-91	CERAMIC CHIP 0.0047UF 10.00% 50V	
C203	1-100-567-81	CERAMIC CHIP 0. 01UF 10% 25V	
C205	1-164-882-81	CERAMIC CHIP 220PF 5.00% 16V	
C206	1-164-882-81	CERAMIC CHIP 220PF 5.00% 16V	
C208	1-100-567-81	CERAMIC CHIP 0. 01UF 10% 25V	
C209	1-127-772-81	CERAMIC CHIP 0. 033UF 10% 10V	
C210	1-100-567-81	CERAMIC CHIP 0. 01UF 10% 25V	
C211	1-127-772-81	CERAMIC CHIP 0. 033UF 10% 10V	
C212	1-100-567-81	CERAMIC CHIP 0. 01UF 10% 25V	
C213	1-100-567-81	CERAMIC CHIP 0. 01UF 10% 25V	
C214	1-164-937-81	CERAMIC CHIP 0. 001UF 10.00% 50V	
C215	1-162-970-91	CERAMIC CHIP 0. 01UF 10.00% 25V	
C217	1-128-994-21	ELECT CHIP 47UF 20% 10V	
C218	1-124-779-21	ELECT CHIP 10UF 20.00% 16V	
C219	1-100-567-81	CERAMIC CHIP 0. 01UF 10% 25V	
C220	1-124-779-21	ELECT CHIP 10UF 20.00% 16V	
C221	1-107-826-91	CERAMIC CHIP 0.1UF 10.00% 16V	
C222	1-107-826-91	CERAMIC CHIP 0.1UF 10.00% 16V	
C223	1-107-826-91	CERAMIC CHIP 0.1UF 10.00% 16V	
C224	1-100-567-81	CERAMIC CHIP 0. 01UF 10% 25V	
C225	1-164-937-81	CERAMIC CHIP 0.001UF 10.00% 50V	
C226	1-164-937-81	CERAMIC CHIP 0. 001UF 10.00% 50V	
C233	1-164-941-81	CERAMIC CHIP 0.0047UF 10.00% 16V	
C318	1-164-866-81	CERAMIC CHIP 47PF 5.00% 50V	
C319	1-164-874-81	CERAMIC CHIP 100PF 5.00% 50V	
C320	1-164-874-81	CERAMIC CHIP 100PF 5.00% 50V	
C321	1-164-874-81	CERAMIC CHIP 100PF 5.00% 50V	
C322	1-164-866-81	CERAMIC CHIP 47PF 5.00% 50V	
C401	1-164-937-81	CERAMIC CHIP 0. 001UF 10.00% 50V	
C402	1-164-937-81	CERAMIC CHIP 0. 001UF 10.00% 50V	
C405	1-164-876-81	CERAMIC CHIP 120PF 5.00% 50V	
C406	1-164-876-81	CERAMIC CHIP 120PF 5.00% 50V	
C408	1-100-567-81	CERAMIC CHIP 0. 01UF 10% 25V	
C413	1-117-681-21	ELECT CHIP 100UF 20.00% 16V	
C415	1-164-882-81	CERAMIC CHIP 220PF 5.00% 16V	
C416	1-164-882-81	CERAMIC CHIP 220PF 5.00% 16V	
C423	1-124-779-21	ELECT CHIP 10UF 20.00% 16V	
C424	1-124-779-21	ELECT CHIP 10UF 20.00% 16V	
C428	1-165-908-91	CERAMIC CHIP 1UF 10% 10V	
C442	1-165-908-91	CERAMIC CHIP 1UF 10% 10V	
C443	1-124-779-21	ELECT CHIP 10UF 20.00% 16V	
C444	1-126-204-21	ELECT CHIP 47UF 20.00% 16V	
C447	1-100-909-11	CERAMIC CHIP 10UF 10% 6.3V	
C448	1-100-909-11	CERAMIC CHIP 10UF 10% 6.3V	
C502	1-128-994-21	ELECT CHIP 47UF 20% 10V	
C503	1-128-994-21	ELECT CHIP 47UF 20% 10V	
C504	1-107-826-91	CERAMIC CHIP 0.1UF 10.00% 16V	
C505	1-107-826-91	CERAMIC CHIP 0.1UF 10.00% 16V	
C506	1-107-826-91	CERAMIC CHIP 0.1UF 10.00% 16V	
C1102	1-125-777-81	CERAMIC CHIP 0.1UF 10.00% 10V	
C1103	1-164-937-81	CERAMIC CHIP 0. 001UF 10.00% 50V	
C1104	1-164-937-81	CERAMIC CHIP 0. 001UF 10.00% 50V	
C1105	1-164-937-81	CERAMIC CHIP 0. 001UF 10.00% 50V	
C1106	1-164-937-81	CERAMIC CHIP 0. 001UF 10.00% 50V	
C1107	1-164-937-81	CERAMIC CHIP 0. 001UF 10.00% 50V	
C1108	1-164-937-81	CERAMIC CHIP 0.001UF 10.00% 50V	
C1109	1-164-937-81	CERAMIC CHIP 0. 001UF 10.00% 50V	
C1110	1-162-964-91	CERAMIC CHIP 0. 001UF 10.00% 50V	
C1112	1-164-933-81	CERAMIC CHIP 220PF 10.00% 50V	
C1113	1-164-933-81	CERAMIC CHIP 220PF 10.00% 50V	
C1114	1-164-933-81	CERAMIC CHIP 220PF 10.00% 50V	
		<CONNECTOR>	
CN101	1-815-763-32	CONNECTOR, FFC/FPC 24P	
CN102	1-821-450-12	CONNECTOR, HDMI	
CN102	1-821-450-22	CONNECTOR, HDMI	
CN105	1-564-705-11	PIN, CONNECTOR (SMALL TYPE) 3P	
CN106	1-564-707-11	PIN, CONNECTOR (SMALL TYPE) 5P	

MV-60

Ref. No.	Part No.	Description	Remark
CN201	1-564-708-11	PIN, CONNECTOR (SMALL TYPE) 6P	
CN202	1-794-362-51	CONNECTOR, FFC/FPC 5P	
* CN501	1-564-009-11	PIN, CONNECTOR 10P	
		<DIODE>	
D311	6-501-675-01	DIODE HZM6.8ZMWATL-E	
D312	6-501-675-01	DIODE HZM6.8ZMWATL-E	
D313	6-501-675-01	DIODE HZM6.8ZMWATL-E	
D314	6-501-675-01	DIODE HZM6.8ZMWATL-E	
D401	6-501-817-01	DIODE MA2J1110GLS0	
D403	6-501-726-01	DIODE MAZ8047GMLS0	
		<FERRITE>	
FB106	1-469-324-21	FERRITE 0UH	
FB108	1-469-324-21	FERRITE 0UH	
FB111	1-469-670-21	FERRITE 0UH	
FB112	1-469-670-21	FERRITE 0UH	
FB115	1-400-382-21	FERRITE 0UH	
FB116	1-414-226-21	FERRITE 0UH	
FB123	1-400-382-21	FERRITE 0UH	
FB124	1-469-670-21	FERRITE 0UH	
FB129	1-469-112-21	FERRITE 0UH	
FB132	1-400-382-21	FERRITE 0UH	
FB133	1-400-382-21	FERRITE 0UH	
FB134	1-400-382-21	FERRITE 0UH	
FB135	1-400-382-21	FERRITE 0UH	
FB501	1-469-324-21	FERRITE 0UH	
FB504	1-469-324-21	FERRITE 0UH	
		<IC>	
		Notes: MV-60 Board must be replaced if IC103 (EEPROM) is damaged or not functioning. The old MV-60 Board must be completely disposed.	
IC102	6-712-212-01	IC MX25L3205DM2I-12G (EXCEPT DVP-NS728HP:BR)	
IC102	6-808-703-01	IC MX25L3205DM2I-12G-I3UH1XXXU (DVP-NS728HP:BR)	
IC103	SEE NOTE ABOVE		
IC105	6-702-302-01	IC TK11133CSCL-G	
IC106	6-706-487-01	IC TC7SH08FU(T5RSOYJF)	
IC107	6-702-302-01	IC TK11133CSCL-G	
IC108	6-703-224-01	IC S-80828CNNB-B8NT2G	
IC109	6-705-337-01	IC TK11150CSCL-G	
IC110	6-707-739-01	IC MM1661JTRE	
IC112	6-702-302-01	IC TK11133CSCL-G	
IC201	6-704-524-01	IC FAN8036L	
IC407	8-759-278-58	IC NJM4558V-TE2	
		<INDUCTOR>	
L301	1-412-979-41	INDUCTOR 1UH	
LF101	1-457-374-21	INDUCTOR 0UH	
LF102	1-457-374-21	INDUCTOR 0UH	
LF103	1-457-374-21	INDUCTOR 0UH	
LF104	1-457-374-21	INDUCTOR 0UH	

Ref. No.	Part No.	Description			Remark
		<FUSE>			
⚠ PS502	1-576-892-11	FUSE 1A 0V			
		<TRANSISTOR>			
Q101	6-550-008-01	TRANSISTOR UM6K1N-TN			
Q102	6-550-653-01	TRANSISTOR QST8TR			
Q103	8-729-424-63	TRANSISTOR UN2212-TX			
Q104	6-550-008-01	TRANSISTOR UM6K1N-TN			
Q105	8-729-028-27	TRANSISTOR 2SK2009(TE85L)			
Q401	8-729-038-12	TRANSISTOR RT1P141C-TP-1			
Q402	8-729-038-23	TRANSISTOR RT1N141C-TP-1			
Q403	8-729-038-28	TRANSISTOR RT1N441C-TP-1			
Q405	6-551-696-01	TRANSISTOR ISA1235AC1TP-1EF			
* Q407	6-551-959-01	TRANSISTOR IMX25T110			
Q411	6-551-696-01	TRANSISTOR ISA1235AC1TP-1EF			
Q417	8-729-038-22	TRANSISTOR RT1N140C-TP-1			
		<RESISTOR>			
R102	1-216-864-91	SHORT CHIP	0		
R103	1-208-659-81	METAL CHIP	100	0.5%	1/16W
R104	1-208-896-81	METAL CHIP	2.4K	0.5%	1/16W
R105	1-216-864-91	SHORT CHIP	0		
R107	1-218-965-81	METAL CHIP	10K	5%	1/16W
R108	1-216-857-91	METAL CHIP	1M	5%	1/10W
R109	1-218-990-81	SHORT CHIP	0		
R110	1-218-973-81	METAL CHIP	47K	5%	1/16W
R111	1-216-809-91	METAL CHIP	100	5%	1/10W
R112	1-211-977-91	METAL CHIP	22	0.5%	1/10W
R113	1-211-977-91	METAL CHIP	22	0.5%	1/10W
R114	1-216-845-91	METAL CHIP	100K	5%	1/10W
R115	1-211-977-91	METAL CHIP	22	0.5%	1/10W
R116	1-218-953-81	METAL CHIP	1K	5%	1/16W
R117	1-218-973-81	METAL CHIP	47K	5%	1/16W
R118	1-216-801-91	METAL CHIP	22	5%	1/10W
R120	1-216-801-91	METAL CHIP	22	5%	1/10W
R121	1-216-801-91	METAL CHIP	22	5%	1/10W
R122	1-216-864-91	SHORT CHIP	0		
R123	1-218-990-81	SHORT CHIP	0		
R124	1-218-973-81	METAL CHIP	47K	5%	1/16W
R125	1-218-990-81	SHORT CHIP	0		
R126	1-218-965-81	METAL CHIP	10K	5%	1/16W
R127	1-218-961-81	METAL CHIP	4.7K	5%	1/16W
R128	1-218-961-81	METAL CHIP	4.7K	5%	1/16W
R130	1-218-965-81	METAL CHIP	10K	5%	1/16W
R131	1-216-864-91	SHORT CHIP	0		
R132	1-216-864-91	SHORT CHIP	0		
R133	1-218-973-81	METAL CHIP	47K	5%	1/16W
R136	1-216-864-91	SHORT CHIP	0		
R137	1-218-990-81	SHORT CHIP	0		
R138	1-218-961-81	METAL CHIP	4.7K	5%	1/16W
R139	1-216-864-91	SHORT CHIP	0		
R140	1-216-824-91	METAL CHIP	1.8K	5%	1/10W
R142	1-216-845-91	METAL CHIP	100K	5%	1/10W

The components identified by mark ⚠ or dotted line with mark ⚠ are critical for safety.
Replace only with part number specified.

MV-60

Ref. No.	Part No.	Description			Remark
R145	1-218-990-81	SHORT CHIP	0		
R146	1-218-990-81	SHORT CHIP	0		
R147	1-218-990-81	SHORT CHIP	0		
R148	1-218-990-81	SHORT CHIP	0		
R149	1-216-824-91	METAL CHIP	1.8K	5%	1/10W
R150	1-216-864-91	SHORT CHIP	0		
R151	1-218-965-81	METAL CHIP	10K	5%	1/16W
R156	1-218-941-81	METAL CHIP	100	5%	1/16W
R157	1-216-864-91	SHORT CHIP	0		
R162	1-218-990-81	SHORT CHIP	0		
R163	1-218-990-81	SHORT CHIP	0		
R165	1-218-959-81	METAL CHIP	3.3K	5%	1/16W
R166	1-216-864-91	SHORT CHIP	0		
R168	1-216-864-91	SHORT CHIP	0		
R174	1-216-864-91	SHORT CHIP	0		
R178	1-216-864-91	SHORT CHIP	0		
R181	1-218-990-81	SHORT CHIP	0		
R185	1-218-965-81	METAL CHIP	10K	5%	1/16W
R189	1-211-990-91	METAL CHIP	75	0.5%	1/10W
R190	1-211-990-91	METAL CHIP	75	0.5%	1/10W
R191	1-218-953-81	METAL CHIP	1K	5%	1/16W
R192	1-211-990-91	METAL CHIP	75	0.5%	1/10W
R193	1-218-953-81	METAL CHIP	1K	5%	1/16W
R194	1-218-965-81	METAL CHIP	10K	5%	1/16W
R195	1-211-990-91	METAL CHIP	75	0.5%	1/10W
R196	1-216-864-91	SHORT CHIP	0		
R199	1-216-864-91	SHORT CHIP	0		
R204	1-218-954-81	METAL CHIP	1.2K	5%	1/16W
R205	1-218-965-81	METAL CHIP	10K	5%	1/16W
R206	1-218-965-81	METAL CHIP	10K	5%	1/16W
R207	1-218-958-81	METAL CHIP	2.7K	5%	1/16W
R208	1-218-971-81	METAL CHIP	33K	5%	1/16W
R209	1-218-971-81	METAL CHIP	33K	5%	1/16W
R210	1-218-973-81	METAL CHIP	47K	5%	1/16W
R212	1-218-965-81	METAL CHIP	10K	5%	1/16W
R213	1-218-963-81	METAL CHIP	6.8K	5%	1/16W
R214	1-218-967-81	METAL CHIP	15K	5%	1/16W
R215	1-218-966-81	METAL CHIP	12K	5%	1/16W
R219	1-218-970-81	METAL CHIP	27K	5%	1/16W
R219	1-218-970-81	METAL CHIP	27K	5%	1/16W
R221	1-208-929-81	METAL CHIP	56K	0.5%	1/16W
R222	1-218-971-81	METAL CHIP	33K	5%	1/16W
R223	1-208-935-81	METAL CHIP	100K	0.5%	1/16W
R224	1-218-965-81	METAL CHIP	10K	5%	1/16W
R225	1-208-935-81	METAL CHIP	100K	0.5%	1/16W
R226	1-208-929-81	METAL CHIP	56K	0.5%	1/16W
R230	1-208-933-81	METAL CHIP	82K	0.5%	1/16W
R231	1-208-915-81	METAL CHIP	15K	0.5%	1/16W
R232	1-208-917-81	METAL CHIP	18K	0.5%	1/16W
R233	1-208-923-81	METAL CHIP	33K	0.5%	1/16W
R234	1-218-965-81	METAL CHIP	10K	5%	1/16W
R236	1-218-953-81	METAL CHIP	1K	5%	1/16W
R237	1-218-953-81	METAL CHIP	1K	5%	1/16W
R238	1-218-959-81	METAL CHIP	3.3K	5%	1/16W
R239	1-218-959-81	METAL CHIP	3.3K	5%	1/16W
R243	1-218-941-81	METAL CHIP	100	5%	1/16W
R246	1-218-961-81	METAL CHIP	4.7K	5%	1/16W
R247	1-218-953-81	METAL CHIP	1K	5%	1/16W
R252	1-218-965-81	METAL CHIP	10K	5%	1/16W
R326	1-216-864-91	SHORT CHIP	0		
R327	1-216-864-91	SHORT CHIP	0		
R328	1-216-864-91	SHORT CHIP	0		
R398	1-216-864-91	SHORT CHIP	0		
R399	1-216-864-91	SHORT CHIP	0		
R401	1-208-911-81	METAL CHIP	10K	0.5%	1/16W
R404	1-208-911-81	METAL CHIP	10K	0.5%	1/16W
R405	1-208-935-81	METAL CHIP	100K	0.5%	1/16W
R406	1-208-935-81	METAL CHIP	100K	0.5%	1/16W
R409	1-208-907-81	METAL CHIP	6.8K	0.5%	1/16W
R410	1-208-907-81	METAL CHIP	6.8K	0.5%	1/16W
R411	1-208-919-81	METAL CHIP	22K	0.5%	1/16W
R412	1-208-919-81	METAL CHIP	22K	0.5%	1/16W
R414	1-218-949-81	METAL CHIP	470	5%	1/16W
R415	1-218-949-81	METAL CHIP	470	5%	1/16W
R422	1-218-965-81	METAL CHIP	10K	5%	1/16W
R424	1-218-965-81	METAL CHIP	10K	5%	1/16W
R425	1-218-973-81	METAL CHIP	47K	5%	1/16W
R426	1-218-953-81	METAL CHIP	1K	5%	1/16W
R427	1-218-953-81	METAL CHIP	1K	5%	1/16W
R428	1-218-965-81	METAL CHIP	10K	5%	1/16W
R429	1-218-973-81	METAL CHIP	47K	5%	1/16W
R430	1-218-973-81	METAL CHIP	47K	5%	1/16W
R434	1-218-961-81	METAL CHIP	4.7K	5%	1/16W
R435	1-218-961-81	METAL CHIP	4.7K	5%	1/16W
R451	1-211-989-91	METAL CHIP	68	0.5%	1/10W
R452	1-218-871-91	METAL CHIP	10K	0.5%	1/10W
R453	1-218-831-91	METAL CHIP	220	0.5%	1/10W
R454	1-218-950-81	METAL CHIP	560	5%	1/16W
R456	1-218-951-81	METAL CHIP	680	5%	1/16W
R497	1-208-935-81	METAL CHIP	100K	0.5%	1/16W
R498	1-208-935-81	METAL CHIP	100K	0.5%	1/16W
R499	1-216-797-91	METAL CHIP	10	5%	1/10W
R1101	1-218-841-91	METAL CHIP	560	0.5%	1/10W
R1104	1-216-864-91	SHORT CHIP	0		
R1115	1-216-864-91	SHORT CHIP	0		
R1129	1-216-845-91	METAL CHIP	100K	5%	1/10W
R1133	1-216-864-91	SHORT CHIP	0		
R1134	1-216-864-91	SHORT CHIP	0		
R1138	1-218-990-81	SHORT CHIP	0		
R1139	1-216-864-91	SHORT CHIP	0		
R1140	1-218-990-81	SHORT CHIP	0		
R1141	1-218-990-81	SHORT CHIP	0		
R1142	1-218-990-81	SHORT CHIP	0		
R1143	1-218-990-81	SHORT CHIP	0		
R1144	1-218-990-81	SHORT CHIP	0		
R1145	1-216-864-91	SHORT CHIP	0		
R1146	1-216-864-91	SHORT CHIP	0		
R1147	1-216-864-91	SHORT CHIP	0		
R1150	1-218-959-81	METAL CHIP	3.3K	5%	1/16W
R1151	1-218-959-81	METAL CHIP	3.3K	5%	1/16W
R1152	1-218-959-81	METAL CHIP	3.3K	5%	1/16W
R1168	1-216-813-91	METAL CHIP	220	5%	1/10W
R1178	1-218-953-81	METAL CHIP	1K	5%	1/16W
R1181	1-218-990-81	SHORT CHIP	0		
R1191	1-218-990-81	SHORT CHIP	0		
R1192	1-218-990-81	SHORT CHIP	0		
R1193	1-218-990-81	SHORT CHIP	0		
R1194	1-218-990-81	SHORT CHIP	0		
R1201	1-218-990-81	SHORT CHIP	0		
R1202	1-218-959-81	METAL CHIP	3.3K	5%	1/16W

Ref. No.	Part No.	Description	Remark
R1204	1-216-803-91	METAL CHIP 33 5% 1/10W	
		<CONDUCTOR>	
RB105	1-234-959-21	RES, NETW ORK 75 (1005X4)	
RB106	1-234-959-21	RES, NETW ORK 75 (1005X4)	
RB107	1-234-944-21	RES, NETW ORK 47 (1005X4)	
RB108	1-234-944-21	RES, NETW ORK 47 (1005X4)	
		<CRYSTAL>	
X101	1-814-144-11	QUARTZ CRYSTAL UNIT (DVP-NS718HP:SP,TH,KR,EA,KS,TW & AUS ONLY)	
X101	1-813-924-21	QUARTZ CRYSTAL UNIT (EXCEPT DVP-NS718HP:SP,TH,KR,EA,KS,TW & AUS ONLY)	
🔒	A-1660-790-A	SERVICE ASSY, MV-62 (DVP-NS728H:AEP,UK)	
🔒	A-1660-892-A	SERVICE ASSY, MV-62 (DVP-NS718H:RUS)	
🔒	A-1663-541-A	SERVICE ASSY, MV-62 (DVP-NS728H:AEP,UK)	
🔒	A-1704-162-A	SERVICE ASSY, MV-62 (DVP-NS728H:RUS) **********	
		<CAPACITOR>	
C101	1-100-567-81	CERAMIC CHIP 0. 01UF 10% 25V	
C102	1-125-777-81	CERAMIC CHIP 0.1UF 10.00% 10V	
C103	1-100-909-11	CERAMIC CHIP 10UF 10% 6.3V	
C105	1-128-994-21	ELECT CHIP 47UF 20% 10V	
C106	1-100-567-81	CERAMIC CHIP 0. 01UF 10% 25V	
C107	1-112-717-91	CERAMIC CHIP 1UF 10% 6.3V	
C109	1-125-777-81	CERAMIC CHIP 0.1UF 10.00% 10V	
C111	1-128-994-21	ELECT CHIP 47UF 20% 10V	
C112	1-128-994-21	ELECT CHIP 47UF 20% 10V	
C113	1-100-567-81	CERAMIC CHIP 0. 01UF 10% 25V	
C115	1-125-777-81	CERAMIC CHIP 0.1UF 10.00% 10V	
C116	1-125-777-81	CERAMIC CHIP 0.1UF 10.00% 10V	
C118	1-100-909-11	CERAMIC CHIP 10UF 10% 6.3V	
C119	1-100-909-11	CERAMIC CHIP 10UF 10% 6.3V	
C120	1-127-715-91	CERAMIC CHIP 0. 22UF 10% 16V	
C121	1-127-715-91	CERAMIC CHIP 0. 22UF 10% 16V	
C122	1-100-567-81	CERAMIC CHIP 0. 01UF 10% 25V	
C123	1-100-567-81	CERAMIC CHIP 0. 01UF 10% 25V	
C124	1-100-567-81	CERAMIC CHIP 0. 01UF 10% 25V	
C125	1-125-777-81	CERAMIC CHIP 0.1UF 10.00% 10V	
C126	1-125-777-81	CERAMIC CHIP 0.1UF 10.00% 10V	
C129	1-100-567-81	CERAMIC CHIP 0. 01UF 10% 25V	
C134	1-100-567-81	CERAMIC CHIP 0. 01UF 10% 25V	
C140	1-112-717-91	CERAMIC CHIP 1UF 10% 6.3V	
C141	1-100-567-81	CERAMIC CHIP 0. 01UF 10% 25V	
C142	1-100-567-81	CERAMIC CHIP 0. 01UF 10% 25V	
C143	1-100-567-81	CERAMIC CHIP 0. 01UF 10% 25V	
C144	1-100-567-81	CERAMIC CHIP 0. 01UF 10% 25V	
C145	1-100-567-81	CERAMIC CHIP 0. 01UF 10% 25V	
C147	1-165-908-91	CERAMIC CHIP 1UF 10% 10V	
C148	1-164-230-91	CERAMIC CHIP 220PF 5.00% 50V	
C150	1-100-567-81	CERAMIC CHIP 0. 01UF 10% 25V	
C151	1-100-567-81	CERAMIC CHIP 0. 01UF 10% 25V	

Ref. No.	Part No.	Description	Remark
C152	1-162-918-91	CERAMIC CHIP 18PF 5.00% 50V (DVP-NS728H:AEP,UK & RUS ONLY)	
C152	1-162-917-91	CERAMIC CHIP 15PF 5.00% 50V (DVP-NS718H:AEP,UK & RUS ONLY)	
C153	1-162-917-91	CERAMIC CHIP 15PF 5.00% 50V	
C156	1-100-567-81	CERAMIC CHIP 0. 01UF 10% 25V	
C157	1-165-884-91	CERAMIC CHIP 2.2UF 10% 6.3V	
C159	1-127-715-91	CERAMIC CHIP 0. 22UF 10% 16V	
C160	1-100-567-81	CERAMIC CHIP 0. 01UF 10% 25V	
C162	1-100-567-81	CERAMIC CHIP 0. 01UF 10% 25V	
C163	1-164-938-81	CERAMIC CHIP 0.0015UF 10.00% 50V	
C164	1-100-567-81	CERAMIC CHIP 0. 01UF 10% 25V	
C165	1-100-567-81	CERAMIC CHIP 0. 01UF 10% 25V	
C166	1-127-715-91	CERAMIC CHIP 0. 22UF 10% 16V	
C167	1-100-567-81	CERAMIC CHIP 0. 01UF 10% 25V	
C169	1-125-777-81	CERAMIC CHIP 0. 1UF 10.00% 10V	
C177	1-128-994-21	ELECT CHIP 47UF 20% 10V	
C179	1-125-777-81	CERAMIC CHIP 0. 1UF 10.00% 10V	
C180	1-125-777-81	CERAMIC CHIP 0. 1UF 10.00% 10V	
C181	1-125-777-81	CERAMIC CHIP 0. 1UF 10.00% 10V	
C182	1-127-715-91	CERAMIC CHIP 0. 22UF 10% 16V	
C183	1-114-411-21	CERAMIC CHIP 0. 33UF 10% 6.3V	
C184	1-100-567-81	CERAMIC CHIP 0. 01UF 10% 25V	
C185	1-100-567-81	CERAMIC CHIP 0. 01UF 10% 25V	
C186	1-127-715-91	CERAMIC CHIP 0. 22UF 10% 16V	
C187	1-126-208-21	ELECT CHIP 47UF 20.00% 4V	
C189	1-125-777-81	CERAMIC CHIP 0. 1UF 10.00% 10V	
C190	1-128-994-21	ELECT CHIP 47UF 20% 10V	
C191	1-125-777-81	CERAMIC CHIP 0. 1UF 10.00% 10V	
C192	1-100-567-81	CERAMIC CHIP 0. 01UF 10% 25V	
C193	1-127-715-91	CERAMIC CHIP 0. 22UF 10% 16V	
C195	1-127-715-91	CERAMIC CHIP 0. 22UF 10% 16V	
C197	1-125-777-81	CERAMIC CHIP 0. 1UF 10.00% 10V	
C198	1-165-908-91	CERAMIC CHIP 1UF 10% 10V	
C199	1-162-968-91	CERAMIC CHIP 0.0047UF 10.00% 50V	
C203	1-100-567-81	CERAMIC CHIP 0. 01UF 10% 25V	
C205	1-164-882-81	CERAMIC CHIP 220PF 5.00% 16V	
C206	1-164-882-81	CERAMIC CHIP 220PF 5.00% 16V	
C208	1-100-567-81	CERAMIC CHIP 0. 01UF 10% 25V	
C209	1-127-772-81	CERAMIC CHIP 0. 033UF 10% 10V	
C210	1-100-567-81	CERAMIC CHIP 0. 01UF 10% 25V	
C211	1-127-772-81	CERAMIC CHIP 0. 033UF 10% 10V	
C212	1-100-567-81	CERAMIC CHIP 0. 01UF 10% 25V	
C213	1-100-567-81	CERAMIC CHIP 0. 01UF 10% 25V	
C214	1-164-937-81	CERAMIC CHIP 0. 001UF 10.00% 50V	
C215	1-162-970-91	CERAMIC CHIP 0. 01UF 10.00% 25V	
C217	1-128-994-21	ELECT CHIP 47UF 20% 10V	
C218	1-124-779-21	ELECT CHIP 10UF 20.00% 16V	
C219	1-100-567-81	CERAMIC CHIP 0. 01UF 10% 25V	
C220	1-124-779-21	ELECT CHIP 10UF 20.00% 16V	
C221	1-107-826-91	CERAMIC CHIP 0. 1UF 10.00% 16V	
C222	1-107-826-91	CERAMIC CHIP 0. 1UF 10.00% 16V	
C224	1-100-567-81	CERAMIC CHIP 0. 01UF 10% 25V	
C225	1-164-937-81	CERAMIC CHIP 0. 001UF 10.00% 50V	

The components identified by mark 🔒 contain confidential information. Strictly follow the instructions whenever the components are repaired and/or replaced.

MV-62

Ref. No.	Part No.	Description			Remark
C226	1-164-937-81	CERAMIC CHIP	0.001UF	10.00%	50V
C233	1-164-941-81	CERAMIC CHIP	0.0047UF	10.00%	16V
C301	1-107-826-91	CERAMIC CHIP	0.1UF	10.00%	16V
C318	1-164-866-81	CERAMIC CHIP	47PF	5.00%	50V
C319	1-164-874-81	CERAMIC CHIP	100PF	5.00%	50V
C320	1-164-874-81	CERAMIC CHIP	100PF	5.00%	50V
C321	1-164-874-81	CERAMIC CHIP	100PF	5.00%	50V
C322	1-164-866-81	CERAMIC CHIP	47PF	5.00%	50V
C327	1-126-379-21	ELECT CHIP	22UF	20.00%	16V
C328	1-128-994-21	ELECT CHIP	47UF	20%	10V
C329	1-128-994-21	ELECT CHIP	47UF	20%	10V
C331	1-107-826-91	CERAMIC CHIP	0.1UF	10.00%	16V
C332	1-107-826-91	CERAMIC CHIP	0.1UF	10.00%	16V
C333	1-128-994-21	ELECT CHIP	47UF	20%	10V
C334	1-107-826-91	CERAMIC CHIP	0.1UF	10.00%	16V
C335	1-107-826-91	CERAMIC CHIP	0.1UF	10.00%	16V
C401	1-164-937-81	CERAMIC CHIP	0.001UF	10.00%	50V
C402	1-164-937-81	CERAMIC CHIP	0.001UF	10.00%	50V
C405	1-164-876-81	CERAMIC CHIP	120PF	5.00%	50V
C406	1-164-876-81	CERAMIC CHIP	120PF	5.00%	50V
C408	1-100-567-81	CERAMIC CHIP	0.01UF	10%	25V
C413	1-117-681-21	ELECT CHIP	100UF	20.00%	16V
C415	1-164-882-81	CERAMIC CHIP	220PF	5.00%	16V
C416	1-164-882-81	CERAMIC CHIP	220PF	5.00%	16V
C423	1-124-779-21	ELECT CHIP	10UF	20.00%	16V
C424	1-124-779-21	ELECT CHIP	10UF	20.00%	16V
C428	1-165-908-91	CERAMIC CHIP	1UF	10%	10V
C442	1-165-908-91	CERAMIC CHIP	1UF	10%	10V
C443	1-124-779-21	ELECT CHIP	10UF	20.00%	16V
C444	1-126-204-21	ELECT CHIP	47UF	20.00%	16V
C447	1-100-909-11	CERAMIC CHIP	10UF	10%	6.3V
C448	1-100-909-11	CERAMIC CHIP	10UF	10%	6.3V
C501	1-128-994-21	ELECT CHIP	47UF	20%	10V
C502	1-128-994-21	ELECT CHIP	47UF	20%	10V
C504	1-107-826-91	CERAMIC CHIP	0.1UF	10.00%	16V
C505	1-107-826-91	CERAMIC CHIP	0.1UF	10.00%	16V
C506	1-107-826-91	CERAMIC CHIP	0.1UF	10.00%	16V
C507	1-107-826-91	CERAMIC CHIP	0.1UF	10.00%	16V
C1102	1-125-777-81	CERAMIC CHIP	0.1UF	10.00%	10V
		<CONNECTOR>			
CN101	1-815-763-32	CONNECTOR, FFC/FPC 24P			
CN102	1-821-398-11	HDMI CONNECTOR			
CN105	1-564-705-11	PIN, CONNECTOR (SMALL TYPE) 3P			
CN106	1-564-707-11	PIN, CONNECTOR (SMALL TYPE) 5P			
CN201	1-564-708-11	PIN, CONNECTOR (SMALL TYPE) 6P			
CN202	1-794-362-51	CONNECTOR, FFC/FPC 5P			
* CN501	1-564-009-11	PIN, CONNECTOR 10P			
		<DIODE>			
D303	6-501-675-01	DIODE HZM6.8ZMWATL-E			
D304	6-501-675-01	DIODE HZM6.8ZMWATL-E			
D305	6-501-675-01	DIODE HZM6.8ZMWATL-E			
D306	6-501-675-01	DIODE HZM6.8ZMWATL-E			
D309	8-719-069-56	DI UDZSUSTE-176.2B			
D310	8-719-083-63	DI UDZSUSTE-1713B			
D311	6-501-675-01	DIODE HZM6.8ZMWATL-E			
D312	6-501-675-01	DIODE HZM6.8ZMWATL-E			

Ref. No.	Part No.	Description		Remark
D313	6-501-675-01	DIODE HZM6.8ZMWATL-E		
D314	6-501-675-01	DIODE HZM6.8ZMWATL-E		
D315	6-501-817-01	DIODE MA2J1110GLS0		
D401	6-501-817-01	DIODE MA2J1110GLS0		
D403	6-501-726-01	DIODE MAZ8047GMLS0		
		<FERRITE>		
FB106	1-469-324-21	FERRITE	0UH	
FB108	1-469-324-21	FERRITE	0UH	
FB111	1-469-670-21	FERRITE	0UH	
FB112	1-469-670-21	FERRITE	0UH	
FB115	1-400-382-21	FERRITE	0UH	
FB116	1-414-226-21	FERRITE	0UH	
FB123	1-400-382-21	FERRITE	0UH	
FB124	1-469-670-21	FERRITE	0UH	
FB501	1-469-324-21	FERRITE	0UH	
FB502	1-469-324-21	FERRITE	0UH	
FB504	1-469-324-21	FERRITE	0UH	
		<IC>		
IC102	6-712-212-01	IC MX25L3205DM2I-12G		
IC103	SEE NOTE ABOVE			
IC105	6-702-302-01	IC TK11133CSCL-G		
IC106	6-706-487-01	IC TC7SH08FU(T5RSOYJF)		
IC107	6-702-302-01	IC TK11133CSCL-G		
IC108	6-703-224-01	IC S-80828CNNB-B8NT2G		
IC109	6-705-337-01	IC TK11150CSCL-G		
IC110	6-707-739-01	IC MM1661JTRE		
IC112	6-702-302-01	IC TK11133CSCL-G		
IC201	6-704-524-01	IC FAN8036L		
IC303	8-759-667-17	IC L79M05TLL-SONY-TL-E		
IC305	6-706-453-01	IC NJM2587V(TE2)		
IC407	8-759-278-58	IC NJM4558V-TE2		
		<JACK>		
J401	1-784-431-11	JACK, PIN 1P		
		<INDUCTOR>		
L301	1-412-979-41	INDUCTOR	1UH	
LF101	1-457-374-21	INDUCTOR	0UH	
LF102	1-457-374-21	INDUCTOR	0UH	
LF103	1-457-374-21	INDUCTOR	0UH	
LF104	1-457-374-21	INDUCTOR	0UH	

Notes:
MV-62 Board must be replaced if
IC103 (EEPROM) is damaged or not functioning.

The old MV-62 Board must be completely disposed.

The components identified by mark ⚠ or dotted line with mark ⚠ are critical for safety.
Replace only with part number specified.

Ref. No.	Part No.	Description				Remark
		<FUSE>				
*⚠ PS501	1-576-892-11	FUSE	1A	0V		
*⚠ PS502	1-576-892-11	FUSE	1A	0V		
		<TRANSISTOR>				
Q101	6-550-008-01	TRANSISTOR UM6K1N-TN				
Q102	6-550-653-01	TRANSISTOR QST8TR				
Q103	8-729-424-63	TRANSISTOR UN2212-TX				
Q104	6-550-008-01	TRANSISTOR UM6K1N-TN				
Q105	8-729-028-27	TRANSISTOR 2SK2009(TE85L)				
Q375	8-729-620-07	TRANSISTOR 2SC3052EF-T1-LEF				
Q376	8-729-038-28	TRANSISTOR RT1N441C-TP-1				
Q377	8-729-038-17	TRANSISTOR RT1P441C-TP-1				
Q401	8-729-038-12	TRANSISTOR RT1P141C-TP-1				
Q402	8-729-038-23	TRANSISTOR RT1N141C-TP-1				
Q403	8-729-038-28	TRANSISTOR RT1N441C-TP-1				
Q405	6-551-696-01	TRANSISTOR ISA1235AC1TP-1EF				
* Q407	6-551-959-01	TRANSISTOR IMX25T110				
Q411	6-551-696-01	TRANSISTOR ISA1235AC1TP-1EF				
Q417	8-729-038-22	TRANSISTOR RT1N140C-TP-1				
Q501	6-551-458-01	TRANSISTOR KTD1624-B				
Q502	8-729-038-13	TRANSISTOR RT1P144C-TP-1				
		<RESISTOR>				
R102	1-216-864-91	SHORT CHIP	0			
R103	1-208-659-81	METAL CHIP	100	0.5%	1/16W	
R104	1-208-896-81	METAL CHIP	2.4K	0.5%	1/16W	
R105	1-216-864-91	SHORT CHIP	0			
R106	1-216-864-91	SHORT CHIP	0			
R107	1-218-965-81	METAL CHIP	10K	5%	1/16W	
R108	1-216-857-91	METAL CHIP	1M	5%	1/10W	
R109	1-218-990-81	SHORT CHIP	0			
R110	1-218-973-81	METAL CHIP	47K	5%	1/16W	
R111	1-216-809-91	METAL CHIP	100	5%	1/10W	
R112	1-211-977-91	METAL CHIP	22	0.5%	1/10W	
R113	1-211-977-91	METAL CHIP	22	0.5%	1/10W	
R114	1-216-845-91	METAL CHIP	100K	5%	1/10W	
R115	1-211-977-91	METAL CHIP	22	0.5%	1/10W	
R116	1-218-953-81	METAL CHIP	1K	5%	1/16W	
R117	1-218-973-81	METAL CHIP	47K	5%	1/16W	
R118	1-216-801-91	METAL CHIP	22	5%	1/10W	
R120	1-216-801-91	METAL CHIP	22	5%	1/10W	
R121	1-216-801-91	METAL CHIP	22	5%	1/10W	
R122	1-216-864-91	SHORT CHIP	0			
R123	1-218-990-81	SHORT CHIP	0			
R124	1-218-973-81	METAL CHIP	47K	5%	1/16W	
R125	1-218-990-81	SHORT CHIP	0			
R126	1-218-965-81	METAL CHIP	10K	5%	1/16W	
R127	1-218-961-81	METAL CHIP	4.7K	5%	1/16W	
R128	1-218-961-81	METAL CHIP	4.7K	5%	1/16W	
R130	1-218-965-81	METAL CHIP	10K	5%	1/16W	
R131	1-216-864-91	SHORT CHIP	0			
R132	1-216-864-91	SHORT CHIP	0			
R133	1-218-973-81	METAL CHIP	47K	5%	1/16W	
R136	1-216-864-91	SHORT CHIP	0			
R137	1-218-990-81	SHORT CHIP	0			
R138	1-218-961-81	METAL CHIP	4.7K	5%	1/16W	

Ref. No.	Part No.	Description			Remark
R139	1-216-864-91	SHORT CHIP	0		
R140	1-216-824-91	METAL CHIP	1.8K	5%	1/10W
R142	1-216-845-91	METAL CHIP	100K	5%	1/10W
R144	1-218-990-81	SHORT CHIP	0		
R145	1-218-990-81	SHORT CHIP	0		
R146	1-218-990-81	SHORT CHIP	0		
R147	1-218-990-81	SHORT CHIP	0		
R148	1-218-990-81	SHORT CHIP	0		
R149	1-216-824-91	METAL CHIP	1.8K	5%	1/10W
R150	1-216-864-91	SHORT CHIP	0		
R151	1-218-965-81	METAL CHIP	10K	5%	1/16W
R151	1-218-965-81	METAL CHIP	10K	5%	1/16W
R156	1-218-941-81	METAL CHIP	100	5%	1/16W
R157	1-216-864-91	SHORT CHIP	0		
R160	1-218-990-81	SHORT CHIP	0		
R162	1-218-990-81	SHORT CHIP	0		
R163	1-218-990-81	SHORT CHIP	0		
R165	1-218-959-81	METAL CHIP	3.3K	5%	1/16W
R166	1-216-864-91	SHORT CHIP	0		
R168	1-216-864-91	SHORT CHIP	0		
R174	1-216-864-91	SHORT CHIP	0		
R178	1-216-864-91	SHORT CHIP	0		
R181	1-218-990-81	SHORT CHIP	0		
R183	1-218-990-81	SHORT CHIP	0		
R185	1-218-965-81	METAL CHIP	10K	5%	1/16W
R189	1-211-983-91	METAL CHIP	39	0.5%	1/10W
R190	1-211-990-91	METAL CHIP	75	0.5%	1/10W
R191	1-218-953-81	METAL CHIP	1K	5%	1/16W
R192	1-211-990-91	METAL CHIP	75	0.5%	1/10W
R193	1-218-953-81	METAL CHIP	1K	5%	1/16W
R194	1-218-965-81	METAL CHIP	10K	5%	1/16W
R195	1-211-983-91	METAL CHIP	39	0.5%	1/10W
R196	1-216-864-91	SHORT CHIP	0		
R199	1-216-864-91	SHORT CHIP	0		
R204	1-218-954-81	METAL CHIP	1.2K	5%	1/16W
R205	1-218-965-81	METAL CHIP	10K	5%	1/16W
R206	1-218-965-81	METAL CHIP	10K	5%	1/16W
R207	1-218-958-81	METAL CHIP	2.7K	5%	1/16W
R208	1-218-971-81	METAL CHIP	33K	5%	1/16W
R209	1-218-971-81	METAL CHIP	33K	5%	1/16W
R210	1-218-973-81	METAL CHIP	47K	5%	1/16W
R212	1-218-965-81	METAL CHIP	10K	5%	1/16W
R213	1-218-963-81	METAL CHIP	6.8K	5%	1/16W
R214	1-218-967-81	METAL CHIP	15K	5%	1/16W
R215	1-218-966-81	METAL CHIP	12K	5%	1/16W
R216	1-218-966-81	METAL CHIP	12K	5%	1/16W
R219	1-218-970-81	METAL CHIP	27K	5%	1/16W
R220	1-218-953-81	METAL CHIP	1K	5%	1/16W
R221	1-208-929-81	METAL CHIP	56K	0.5%	1/16W
R222	1-218-971-81	METAL CHIP	33K	5%	1/16W
R223	1-208-935-81	METAL CHIP	100K	0.5%	1/16W
R224	1-218-965-81	METAL CHIP	10K	5%	1/16W
R225	1-208-935-81	METAL CHIP	100K	0.5%	1/16W
R226	1-208-929-81	METAL CHIP	56K	0.5%	1/16W
R230	1-208-933-81	METAL CHIP	82K	0.5%	1/16W
R231	1-208-915-81	METAL CHIP	15K	0.5%	1/16W
R232	1-208-917-81	METAL CHIP	18K	0.5%	1/16W
R233	1-208-923-81	METAL CHIP	33K	0.5%	1/16W
R234	1-218-965-81	METAL CHIP	10K	5%	1/16W

SWITCHING REGULATOR (SRV2187UC) MV-62

Ref. No.	Part No.	Description			Remark
R236	1-218-953-81	METAL CHIP	1K	5%	1/16W
R237	1-218-953-81	METAL CHIP	1K	5%	1/16W
R238	1-218-959-81	METAL CHIP	3.3K	5%	1/16W
R239	1-218-959-81	METAL CHIP	3.3K	5%	1/16W
R243	1-218-941-81	METAL CHIP	100	5%	1/16W
R246	1-218-961-81	METAL CHIP	4.7K	5%	1/16W
R247	1-218-953-81	METAL CHIP	1K	5%	1/16W
R252	1-218-965-81	METAL CHIP	10K	5%	1/16W
R305	1-216-864-91	SHORT CHIP	0		
R306	1-218-990-81	SHORT CHIP	0		
R307	1-218-990-81	SHORT CHIP	0		
R323	1-216-864-91	SHORT CHIP	0		
R324	1-218-990-81	SHORT CHIP	0		
R326	1-216-864-91	SHORT CHIP	0		
R327	1-216-864-91	SHORT CHIP	0		
R328	1-216-864-91	SHORT CHIP	0		
R331	1-211-989-91	METAL CHIP	68	0.5%	1/10W
R332	1-211-989-91	METAL CHIP	68	0.5%	1/10W
R333	1-211-989-91	METAL CHIP	68	0.5%	1/10W
R334	1-211-989-91	METAL CHIP	68	0.5%	1/10W
R335	1-211-990-91	METAL CHIP	75	0.5%	1/10W
R336	1-211-990-91	METAL CHIP	75	0.5%	1/10W
R337	1-211-990-91	METAL CHIP	75	0.5%	1/10W
R385	1-216-833-91	METAL CHIP	10K	5%	1/10W
R386	1-218-847-91	METAL CHIP	1K	0.5%	1/10W
R388	1-218-285-91	METAL CHIP	75	5%	1/10W
R389	1-216-833-91	METAL CHIP	10K	5%	1/10W
R398	1-216-864-91	SHORT CHIP	0		
R399	1-216-864-91	SHORT CHIP	0		
R401	1-208-911-81	METAL CHIP	10K	0.5%	1/16W
R404	1-208-911-81	METAL CHIP	10K	0.5%	1/16W
R405	1-208-935-81	METAL CHIP	100K	0.5%	1/16W
R406	1-208-935-81	METAL CHIP	100K	0.5%	1/16W
R409	1-208-907-81	METAL CHIP	6.8K	0.5%	1/16W
R410	1-208-907-81	METAL CHIP	6.8K	0.5%	1/16W
R411	1-208-919-81	METAL CHIP	22K	0.5%	1/16W
R412	1-208-919-81	METAL CHIP	22K	0.5%	1/16W
R414	1-218-949-81	METAL CHIP	470	5%	1/16W
R415	1-218-949-81	METAL CHIP	470	5%	1/16W
R422	1-218-965-81	METAL CHIP	10K	5%	1/16W
R424	1-218-965-81	METAL CHIP	10K	5%	1/16W
R425	1-218-973-81	METAL CHIP	47K	5%	1/16W
R426	1-218-953-81	METAL CHIP	1K	5%	1/16W
R427	1-218-953-81	METAL CHIP	1K	5%	1/16W
R428	1-218-965-81	METAL CHIP	10K	5%	1/16W
R429	1-218-973-81	METAL CHIP	47K	5%	1/16W
R430	1-218-973-81	METAL CHIP	47K	5%	1/16W
R434	1-218-961-81	METAL CHIP	4.7K	5%	1/16W
R435	1-218-961-81	METAL CHIP	4.7K	5%	1/16W
R451	1-211-989-91	METAL CHIP	68	0.5%	1/10W
R452	1-218-871-91	METAL CHIP	10K	0.5%	1/10W
R453	1-218-831-91	METAL CHIP	220	0.5%	1/10W
R454	1-218-950-81	METAL CHIP	560	5%	1/16W
R456	1-218-951-81	METAL CHIP	680	5%	1/16W
R497	1-208-935-81	METAL CHIP	100K	0.5%	1/16W
R498	1-208-935-81	METAL CHIP	100K	0.5%	1/16W
R499	1-216-797-91	METAL CHIP	10	5%	1/10W
R501	1-216-833-91	METAL CHIP	10K	5%	1/10W
R502	1-216-825-91	METAL CHIP	2.2K	5%	1/10W
R1101	1-218-841-91	METAL CHIP	560	0.5%	1/10W

Ref. No.	Part No.	Description			Remark
R1104	1-216-864-91	SHORT CHIP	0		
R1115	1-216-864-91	SHORT CHIP	0		
R1129	1-216-845-91	METAL CHIP	100K	5%	1/10W
R1133	1-216-864-91	SHORT CHIP	0		
R1134	1-216-864-91	SHORT CHIP	0		
R1137	1-216-864-91	SHORT CHIP	0		
R1138	1-218-990-81	SHORT CHIP	0		
R1139	1-218-990-81	SHORT CHIP	0		
R1140	1-218-990-81	SHORT CHIP	0		
R1141	1-218-990-81	SHORT CHIP	0		
R1142	1-218-990-81	SHORT CHIP	0		
R1143	1-218-990-81	SHORT CHIP	0		
R1144	1-218-990-81	SHORT CHIP	0		
R1145	1-216-864-91	SHORT CHIP	0		
R1146	1-216-864-91	SHORT CHIP	0		
R1147	1-216-864-91	SHORT CHIP	0		
R1150	1-218-959-81	METAL CHIP	3.3K	5%	1/16W
R1151	1-218-959-81	METAL CHIP	3.3K	5%	1/16W
R1152	1-218-959-81	METAL CHIP	3.3K	5%	1/16W
R1168	1-216-813-91	METAL CHIP	220	5%	1/10W
R1178	1-218-953-81	METAL CHIP	1K	5%	1/16W
R1181	1-218-990-81	SHORT CHIP	0		
R1191	1-218-990-81	SHORT CHIP	0		
R1192	1-218-990-81	SHORT CHIP	0		
R1193	1-218-990-81	SHORT CHIP	0		
R1194	1-218-990-81	SHORT CHIP	0		
R1195	1-208-904-81	METAL CHIP	5.1K	0.5%	1/16W
R1201	1-218-990-81	SHORT CHIP	0		
R1202	1-218-959-81	METAL CHIP	3.3K	5%	1/16W
R1204	1-216-801-91	METAL CHIP	22	5%	1/10W

<CONDUCTOR>

RB105	1-234-959-21	RES, NETWORK 75 (1005X4)
RB106	1-234-959-21	RES, NETWORK 75 (1005X4)
RB107	1-234-944-21	RES, NETWORK 47 (1005X4)
RB107	1-234-944-21	RES, NETWORK 47 (1005X4)
RB108	1-234-944-21	RES, NETWORK 47 (1005X4)

<CRYSTAL>

X101	1-814-144-11	QUARTZ CRYSTAL UNIT (DVP-NS718H:AEP,UK & RUS ONLY)
X101	1-813-924-21	QUARTZ CRYSTAL UNIT (DVP-NS728H:AEP,UK & RUS ONLY)

⚠	1-474-147-11	SWITCHING REGULATOR (DVP-NS611HP/NS710H:US/NS717HP/NS718H:CND) **********

SWITCHING REGULATOR (SRV2186WW)

Ref. No.	Part No.	Description	Remark
⚠	1-474-146-11	SWITCHING REGULATOR (NS710:PX/ NS718H:AUS,AEP,UK,RUS,SP,TH, NS718HP: TH,TW,KR,EA,SP, NS728H:AUS,AEP,RUS,UK, NS728HP:E,BR,AR,SP,TH,EA,IN) **********	

<ACCESSORIES>
(DVP-NS601HP/NS700H/NS700HP/NS708H/NS708HP)
****

⚠	1-569-008-41	ADAPTOR, CONVERSION (DVP-NS710H:PX, NS728HP:E)	
	1-828-145-11	CORD, CONNECTION (AV) (DVP-NS611HP, NS710H, NS710HP, NS717HP, NS718H:CND,AUS,RUS,SP,AEP/NS718HP: SP,KS TH,TW,KR,EA, NS728HP:EA,IN,BR,AR,SP,TH, E,RUS,KS NS728H: AUS)	
	*4-130-258-21	MANUAL, INSTRUCTION (ENGLISH) (DVP-NS611HP,NS717HP)	
	*4-130-258-12	MANUAL, INSTRUCTION (ENGLISH) (DVP-NS710H /NS718H:CND)	
	*4-130-258-51	MANUAL, INSTRUCTION (SPANISH) (DVP-NS710HP,NS728HP:E,AR)	
	*4-130-258-32	MANUAL, INSTRUCTION (FRENCH) (DVP-NS718H:CND)	
	*4-130-258-42	MANUAL, INSTRUCTION (FRENCH) (DVP-NS717HP)	
	*4-130-259-11	MANUAL, INSTRUCTION (ENGLISH,SPANISH) (DVP-NS718H: AUS/NS718HP:TH,TW,EA, SP,KS/ NS728H: AUS/NS728HP:SP,TH,EA,IN,KS)	
	*4-139-513-21	MANUAL, INSTRUCTION (FRENCH,DUTCH,GERMAN, ITALIAN) (DVP-NS718H:AE1,NS728H:AE1)	
	*4-139-513-31	MANUAL, INSTRUCTION (SPANISH,PORTUGUESE,GREEK) (DVP-NS718H:AE2,NS728H:AE2)	
	*4-139-513-41	MANUAL, INSTRUCTION (DANISH,FINNISH,SWEDISH,POLISH) (DVP-NS718H:AE3,NS728H:AE3)	
	*4-139-513-11	MANUAL, INSTRUCTION (ENGLISH) (DVP-NS718H:UK,NS728H:UK)	
	*4-139-513-51	MANUAL, INSTRUCTION (RUSSIAN,UKRAINIAN) (DVP-NS718H: RUS, NS728HP:RUS)	
	4-130-259-21	**MANUAL, INSTRUCTION (THAI) (NS718HP:KS/NS728HP:KS**	
	*4-130-259-51	MANUAL, INSTRUCTION (CHINESE TRADITIONAL) (DVP-NS718HP:TW)	
	*4-130-259-61	MANUAL, INSTRUCTION (KOREAN) (DVP-NS718HP:KR)	
	*4-130-259-32	MANUAL, INSTRUCTION (ARABIC) (DVP-NS718HP:EA,KS/ NS728HP:EA,KS)	
	*4-130-259-42	MANUAL, INSTRUCTION (PERSIAN) (DVP-NS718HP:EA,KS/ NS728HP:EA,KS)	
	*4-130-268-11	MANUAL, INSTRUCTION (PORTUGUESE) (DVP-NS728HP:BR)	
	1-487-005-11	REMOTE COMMANDER (RMT-D187A) (DVP-NS611HP:US/NS718H:CND/NS717HP/ NS710H/NS710HP/NS718HP:TW,KR/ NS728HP:E,BR,AR)	(BLACK)
	1-487-006-11	REMOTE COMMANDER (RMT-D187P) (DVP-NS718HP:SP,TH/EA,KS/NS718H:AUS,AEP,UK,RUS/ NS728HP: RUS,SP,TH,EA,KS,IN/NS728H:AUS,AEP,UK)	(BLACK)
	1-487-024-11	REMOTE COMMANDER (RMT-D189P) (DVP-NS718H:AEP,RUS)	(SILVER)

Ref. No.	Part No.	Description	Remark
	1-834-488-11	CABLE,HDMI(1.5M) (NS718HP:KR,TH,SP,EA,KS/NS728HP:E,AR, BR,SP,TH,EA,IN,KS)	
	1-834-338-21	CORD,CONNECTION(HDMI CABLE) (NS611HP/NS710HP/ NS717HP/NS718:TW)	

9-890-701-12

Sony Corporation
Home Entertainment Business Group.

2010A1100-2
2010.02
Published by Design Engineering Department

REVISION HISTORY

Ver.	Date	Description of Revision
1.0	2009.02	New
1.1	2010.02	Add KS:Saudi Arabia model, change EA:Middle east model